ITEM	DRAWING No	DESCRIPTION	QTY.	MASS (kg)
1		100 SHS BALL CAP	4	1.83
2	3983-10-10	100x3 SHS DURAGAL POST	2	12.64
3	3983-10-20	100x3 SHS DURAGAL POST	2	10.86
4	3983-20	FENCE PANEL 1	1	13.99
5	3983-25	FENCE PANEL 2	1	14.05
6	3983-30	FENCE PANEL 3	1	13.51
7	3983-35	FENCE PANEL 4	1	13.54
8	3983-40	FENCE PANEL 5	1	13.94
9	3983-45	FENCE PANEL 6	1	13.14
10	3983-50	FENCE PANEL 7	1	13.08
11	3983-55	FENCE PANEL 8	1	16.46
12	3983-60	FENCE PANEL 9	1	15.70
13	3983-65	FENCE PANEL 10	2	17.69
14	3983-70	FENCE PANEL 11	1	17.67
15	3983-75	GATE	1	11.31

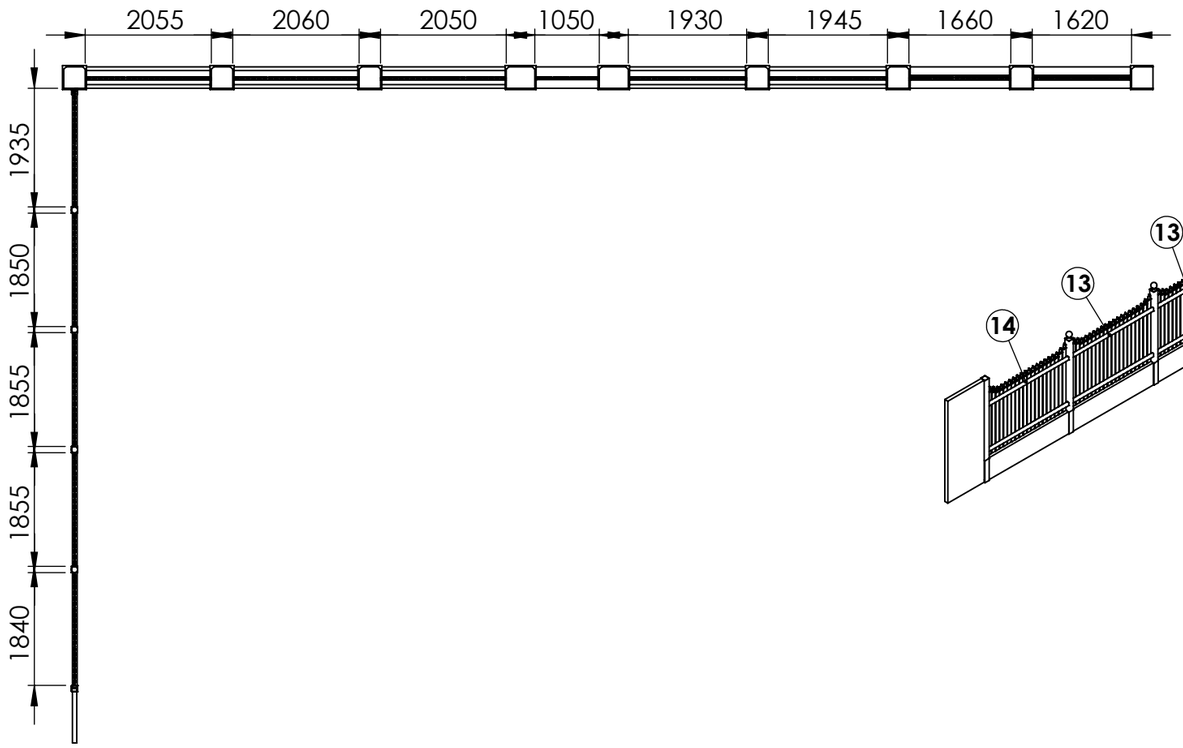

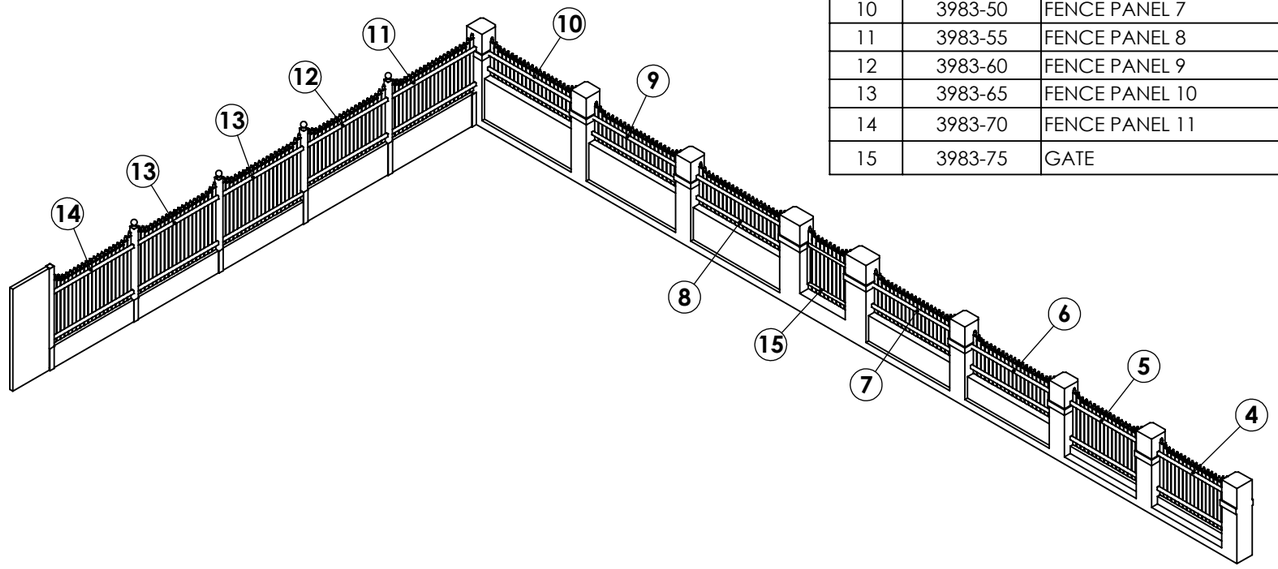

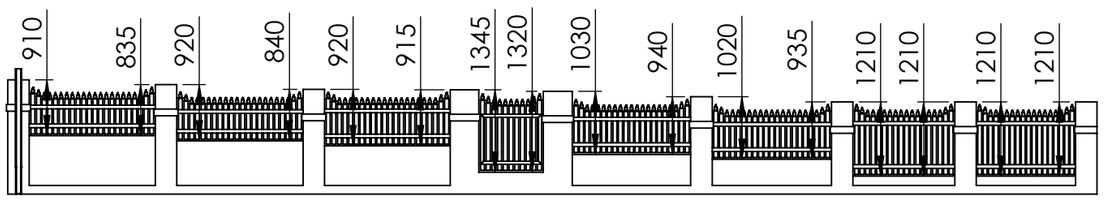

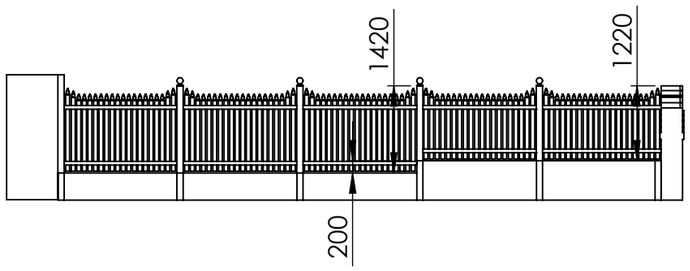

GREGS PAILING FENCE WEIGHT - 246.04 kg

UNLESS OTHERWISE SPECIFIED: TOLERANCES: MACHINE + / - 0.25mm FABRICATION + / - 1.0 mm

THIS DRAWING IS THE PROPERTY OF MECHANICAL ENGINEERING & CAD SERVICES (MECS) Pty Ltd & MUST NOT BE MANUFACTURED FROM,COPIED OR TRANSMITTED TO A THIRD PARTY WITHOUT THE PRIOR APPROVAL FROM MECHANICAL ENGINEERING & CAD SERVICES (MECS) Pty Ltd

DIMENSIONS IN MILLIMETRES

THIRD ANGLE PROJECTION

MECS
Mechanical Engineering & CAD Services
11 Campbell Place WAGGA NSW 2650
Ph:- 0409 985 816
Email: nick@mecservices.com.au

TITLE: GREGS PAILING FENCE

DWG NO. 3983-10 REV A3

DRAWN N DE BRUYN DATE 3/11/2025 SCALE 1:100 SHEET 1 OF 1