DIMENSIONS IN MILLIMETRES

ITEM NO.	MATERIAL	MASS (kg)
1	MS PLATE GRADE 250	2

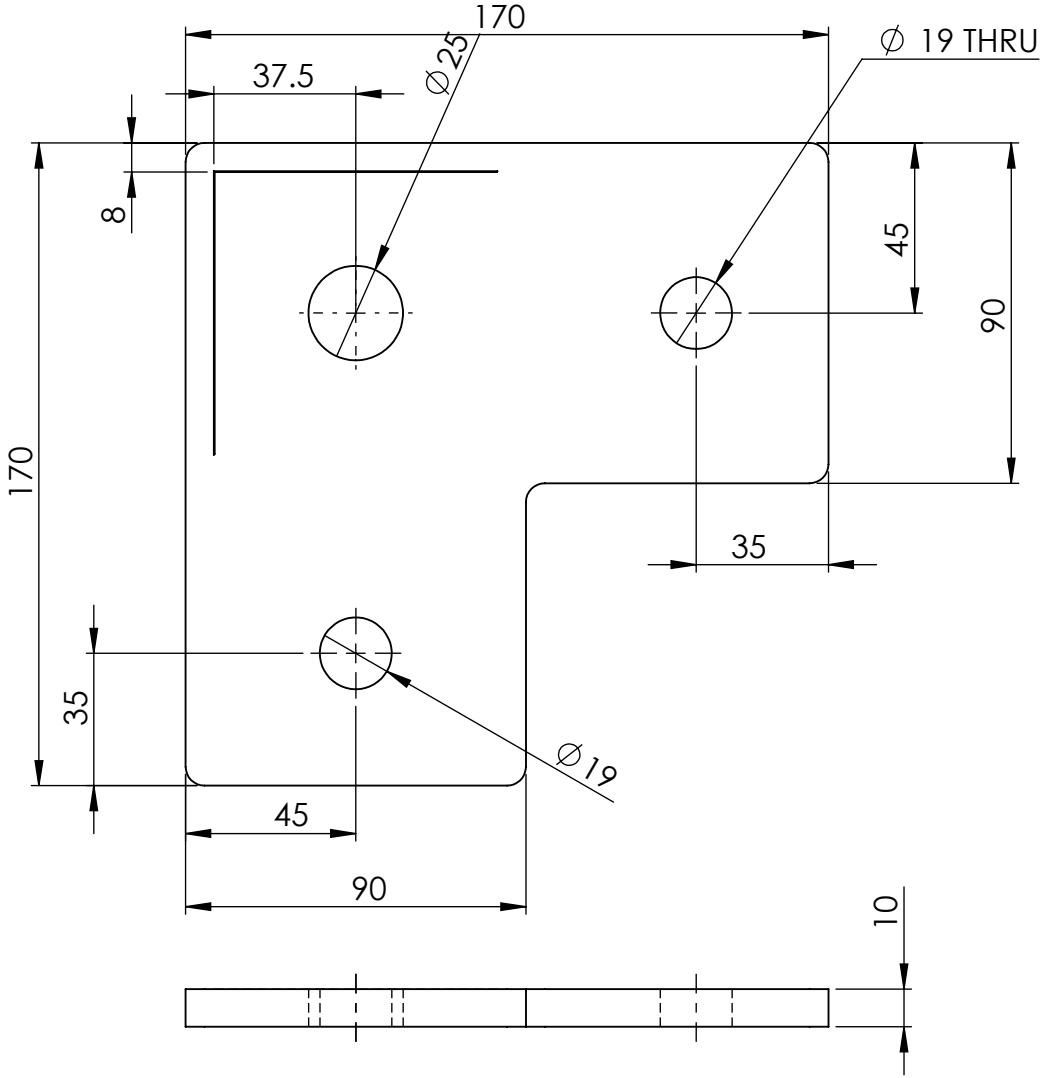

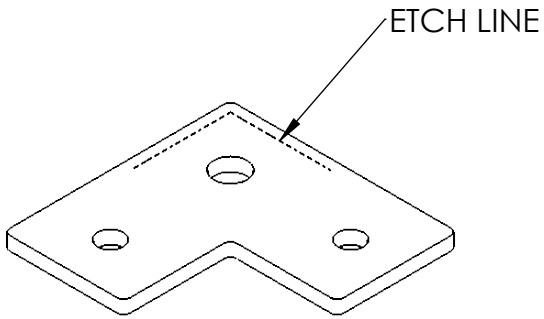

MATERIAL:- MS PLATE GRADE 250

UNLESS OTHERWISE SPECIFIED: TOLERANCES: MACHINE + / - 0.25mm FABRICATION + / - 1.0 mm

THIS DRAWING IS THE PROPERTY OF MECHANICAL ENGINEERING & CAD SERVICES (MECS) Pty Ltd & MUST NOT BE MANUFACTURED FROM,COPIED OR TRANSMITTED TO A THIRD PARTY WITHOUT THE PRIOR APPROVAL FROM MECHANICAL ENGINEERING & CAD SERVICES (MECS) Pty Ltd

THIRD ANGLE PROJECTION

WEIGHT: 2 Kg

MECS
Mechanical Engineering & CAD Services
11 Campbell Place WAGGA NSW 2650
Ph: - 0409 985 816
Email: nick@mecservices.com.au

TITLE: 75 SHS CORNER 10 THK BASE PLATE

DWG NO. 10-10 | A4

DRAWN N DE BRUYN | DATE 29/09/2025 | SCALE:1:2 | SHEET 1 OF 2