ITEM	DRAWING No	DESCRIPTION	QTY.	WEIGHT
1	OEM-MY- 22x105	1 1/"8" MYLAR INSULATION SLEEVE 105 LONG	12	0.01
2	OEM-MY- 22x57	1 1/"8" MYLAR INSULATION SLEEVE 57 LONG	12	0.00
3	OEM-2451-SHL	VALVE 2451 - 200NB GLOBE	1	460.03
4	OEM-2450-SHL	200NB GATE VALVE	1	472.4
5	OEM-516-255-N-70	ORING 5/16 CHORD x 255 OD NITRILE SHORE 70	1	0.05
6	OEM-200-JIS40K-15	200NB JIS40K 1.5mm C-4400 GASKET	3	0
7	11-2450-1	PIPE BETWEEN 2450 & 2451	1	110.57
8	1-18_UNC-AT-135	1 1/8" UNC ALL THREAD Gr 8 x 135 LONG	12	0.67
9		1 1/8" FLAT G10 EXPOY WASHER	36	0.01
10		1 1/8" FLAT WASHER HT	84	0.03
11		1 1/8" UNC HEX NUT ZP Gr 8	48	0.2
12		1 1/8" UNC x 4 1/2" HEX BOLT G 8	12	0.8
13		1 1/8" UNC x 6" HEX BOLT Gr 8	24	0.9

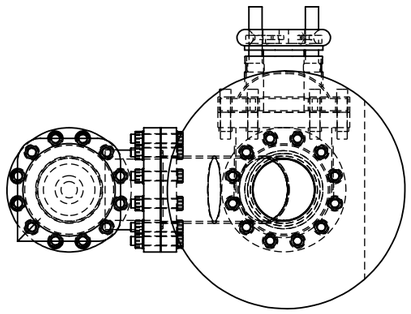

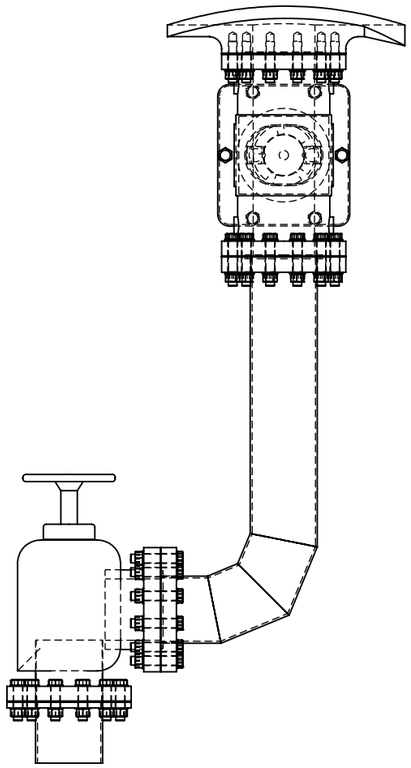

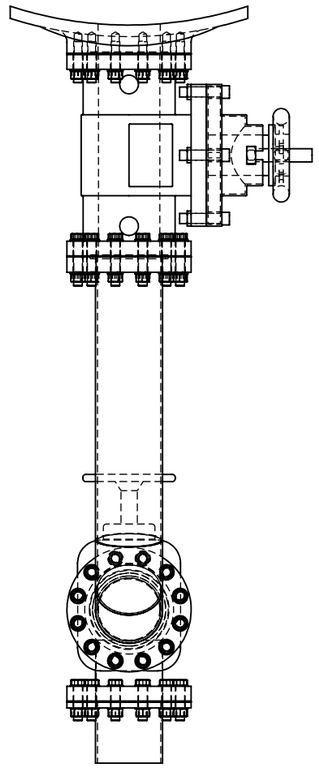

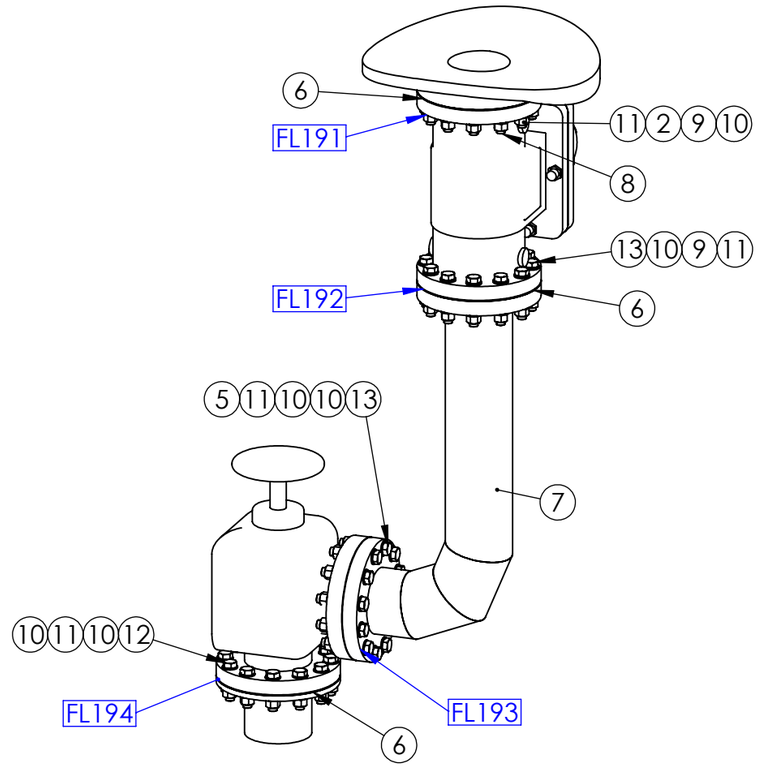

VALVES 2450 & 2451 WEIGHT - 1114.27 kg

REV	NAME & DATE	DESCRIPTION

UNLESS OTHERWISE SPECIFIED:
TOLERANCES: MACHINE + / - 0.25mm
FABRICATION + / - 1.0 mm

THIS DRG SUPPLIED BY
RODDY ENGINEERING
14 Waratah St, TUMUT NSW 2720
Ph: 02 6947 4039

DRAWING No. 11-2450-2451
REV:

DRAWN N DE BRUYN 17/01/2025
DRAWING CHECKED
DESIGNED
DESIGN CHECKED
SCALE 1:20
APPROVED
WORK ORDER No
SECTION No/KKS
A3 SHEET SIZE

snowyhydro LIMITED

M2 POWER STATION
UNIT 11
VALVES 2450 & 2451

SMA-DRG-NO
REV
SHEET 1 OF 1