DIMENSIONS IN MILLIMETRES

ITEM	DRAWING No	DESCRIPTION	QTY.	MASS (kg)
1	OEM-100NB-E-P-316L	100NB BLANK PLATE FLANGE TABLE E MACHINED 90.6 BORE- 316L S/S	1	3
2	OEM-80NB-T-40-316L	80NB BUTT WELD TEE SHED 40 316L S/S	1	2.18
3	OEM-80NB-JIS30K-A-316L	80NB PLATE FLANGE JIS 30 K 316L S/S	1	5.32
4	OEM-80NB-E-P-316L	80NB PLATE FLANGE TABLE E 316L S/S	1	2
5	OEM-80-LR-40-316L	80NB LONG RADIUS BEND SHED 40 316L S/S	1	2.06
6	J003435-61	80NB SHED 40 PIPE VALVE 2839A UPSTREAM PIPE 2	1	26.89
7	J003435-56	80NB SHED 40 PIPE x 145 DEGREE BEND 375R	1	17.63
8	11-2839-A-2-1	80NB SHED 40 PIPE 316L S/S	1	2.77

RED EYE QR CODE AREA

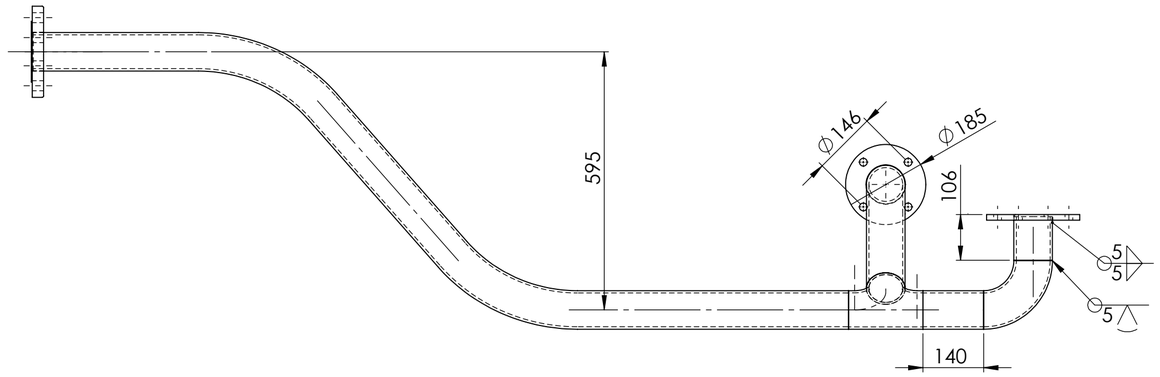

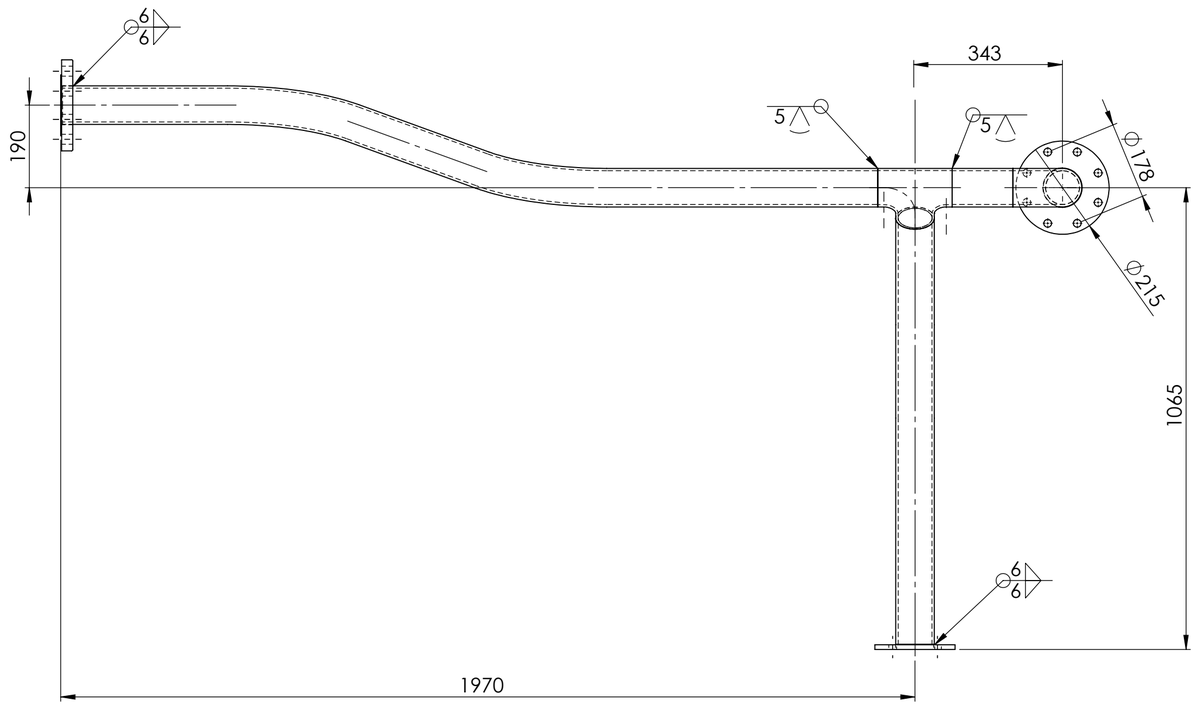

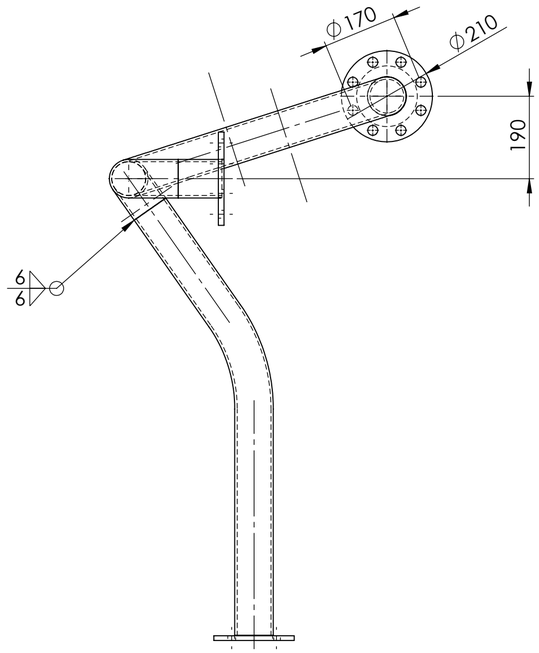

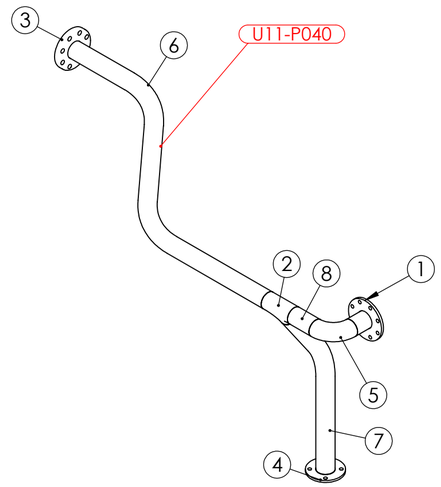

PIPE LABEL - U11-P040

PIPEWORK MANUFACTURED OF A JIG - FLANGES AS PER DRAWING
DIMENSIONS ARE APPROXIMATE

AS INSTALLED 6/3/25

UNIT 11 VALVE 2839 UPSTREAM PIPE 2 WEIGHT -53.57 kg

REV	NAME & DATE	DESCRIPTION

UNLESS OTHERWISE SPECIFIED:
TOLERANCES: MACHINE + / - 0.25mm
FABRICATION + / - 1.0 mm

THIS DRG SUPPLIED BY
RODDY ENGINEERING
14 Waratah St, TUMUT NSW 2720
Ph: 02 6947 4039

DRAWING No. 11-2839-A-2
REV:

DRAWN N DE BRUYN 26/03/2024
DRAWING CHECKED
DESIGNED
DESIGN CHECKED
SCALE 1:10
WORK ORDER No
APPROVED
SECTION No/KKS
A2 SHEET SIZE

snowyhydro LIMITED

M2 POWER STATION UNIT 11
VALVE 2839 UPSTREAM PIPE 2

SMA-DRG-NO

REV

SHEET 1 OF 1