ITEM	DRAWING No	DESCRIPTION	QTY.	MASS (kg)
1	OEM-80NB-150-SF-316L	80NB - 150 Lb SLIP ON FLANGE 316L S/S	2	4.10
2	OEM-80-LR-40-316L	80NB LONG RADIUS BEND SHED 40 316L S/S	1	2.06
3	11-2843-1-1	80NB SHED 40 PIPE 316 S/S	1	6.14

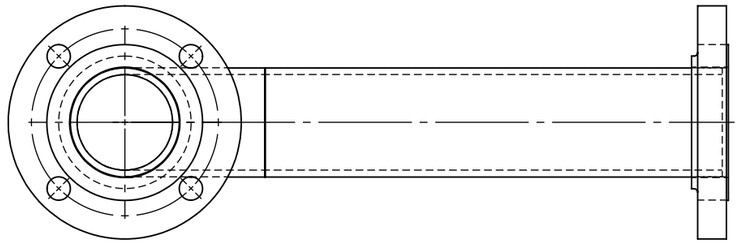

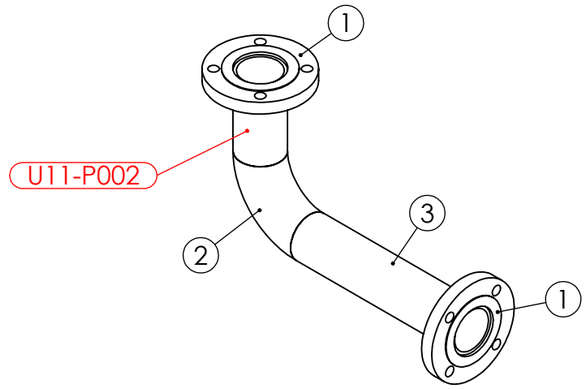

PIPE LABEL - U11-P002

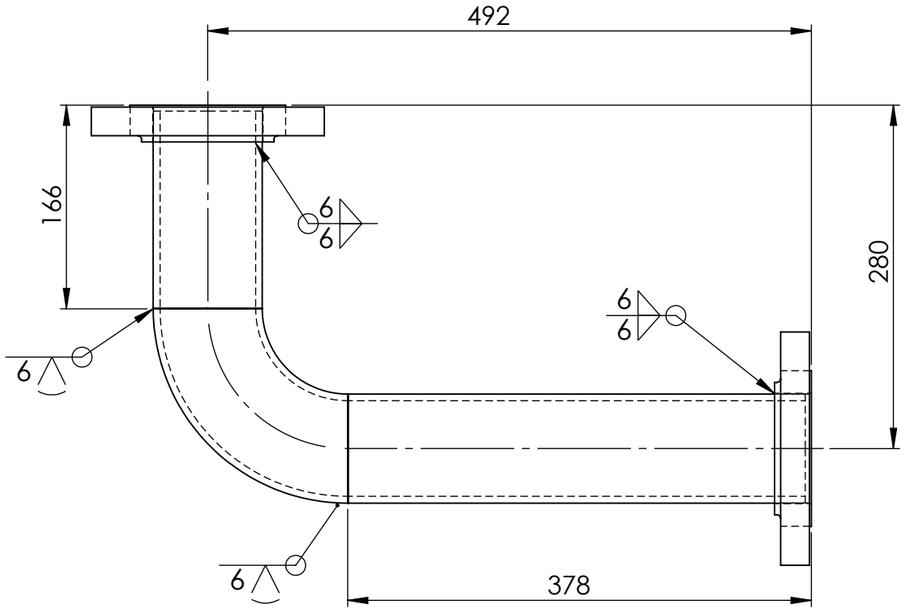

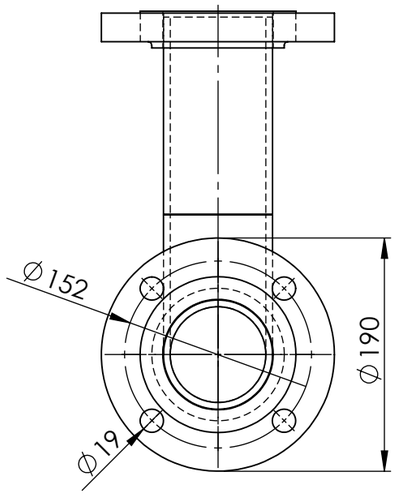

AS INSTALLED 14/3/25

PIPEWORK MANUFACTURED OF A JIG - FLANGES AS PER DRAWING
DIMENSIONS ARE APPROXIMATE

UNIT 11 VALVE 2843 DOWN STREAM PIPE WEIGHT - 16.41 kg

		UNLESS OTHERWISE SPECIFIED: TOLERANCES: MACHINE + / - 0.25mm FABRICATION + / - 1.0 mm	DRAWN N DE BRUYN 17/04/2024	DRAWING CHECKED	snowyhydro LIMITED
		THIS DRG SUPPLIED BY RODDY ENGINEERING 14 Waratah St, TUMUT NSW 2720 Ph: 02 6947 4039	DESIGNED	DESIGN CHECKED	M2 POWER STATION UNIT 11 VALVE 2843 DOWN STREAM PIPE
			SCALE 1:5 WORK ORDER No	APPROVED	
REV	NAME & DATE	DESCRIPTION	DRAWING No. 11-2843-1 REV:	SECTION No/KKS	A3 SHEET SIZE	SMA-DRG-NO	REV	SHEET 2 OF 4

0,0