ITEM	DRAWING No	DESCRIPTION	QTY.	MASS (kg)
1	OEM-80NB-JIS10K-316L	80NB PLATE FLANGE JIS 10K - 316L S/S	1	3
2	OEM-80NB-150-SF-316L	80NB - 150 Lb SLIP ON FLANGE 316L S/S	1	4.10
3	OEM-80-LR-40-316L	80NB LONG RADIUS BEND SHED 40 316L S/S	1	2.06
4	11-2844-1-1	80NB SHED 40 PIPE 316 S/S	1	3.64

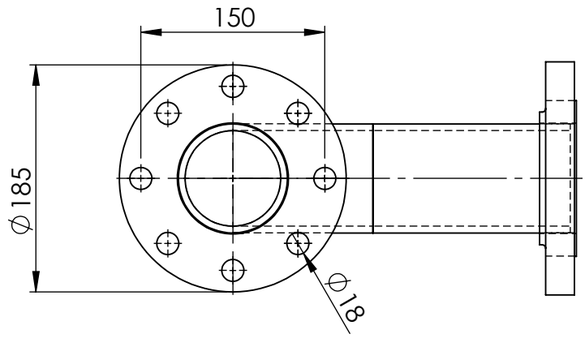

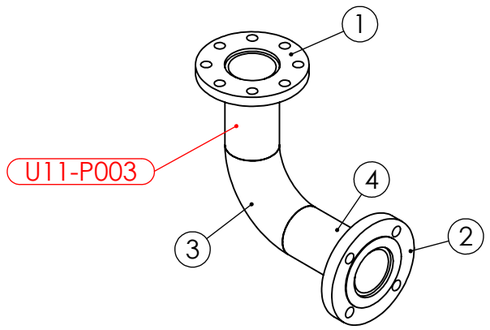

PIPE LABEL - U11-P003

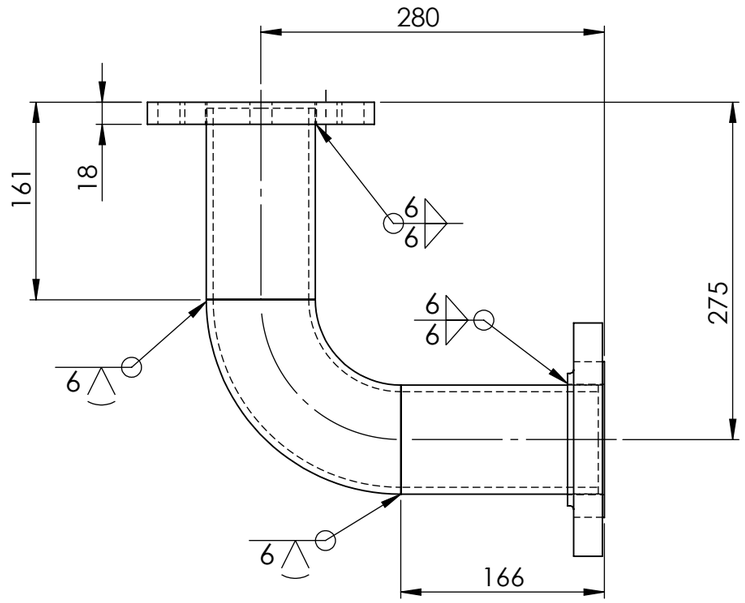

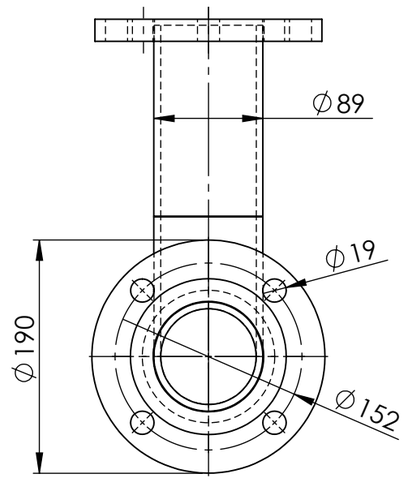

PIPEWORK MANUFACTURED OF A JIG - FLANGES AS PER DRAWING
DIMENSIONS ARE APPROXIMATE

AS INSTALLED 14/3/25

UNIT 11 VALVE 2844 DOWN STREAM PIPE WEIGHT - 12.46 kg

REV	NAME & DATE	DESCRIPTION	UNLESS OTHERWISE SPECIFIED: TOLERANCES: MACHINE + / - 0.25mm FABRICATION + / - 1.0 mm	DRAWN N DE BRUYN 17/04/2024	DRAWING CHECKED
			THIS DRG SUPPLIED BY RODDY ENGINEERING 14 Waratah St, TUMUT NSW 2720 Ph: 02 6947 4039	DESIGNED	DESIGN CHECKED
				SCALE 1:5 WORK ORDER No	APPROVED
			DRAWING No. 11-2844-1 REV:	SECTION No/KKS	A3 SHEET SIZE

snowyhydro LIMITED

M2 POWER STATION UNIT 11
VALVE 2844 DOWN STREAM PIPE

SMA-DRG-NO

REV

SHEET 4 OF 4

0,0