ITEM	DRAWING No	DESCRIPTION	QTY.	MASS (kg)
1	OEM-80NBx40-T-40-316L	80NB x 40NB BUTT WELD REDUCING TEE 316L S/S	1	2.31
2	OEM-80NB-JIS30K-A-316L	80NB PLATE FLANGE JIS 30 K 316L S/S	1	5.32
3	OEM-80NB-300-SF-316L	80NB - 300lb SLIP ON FLANGE 316L S/S	1	6.08
4	OEM-40-300-SO-316L	40NB FLANGE ANSI 300 LB SLIP ON 316L S/S	1	3
5	11-2904-3-1	40NB SHED 40 PIPE 316L S/S	1	0.47

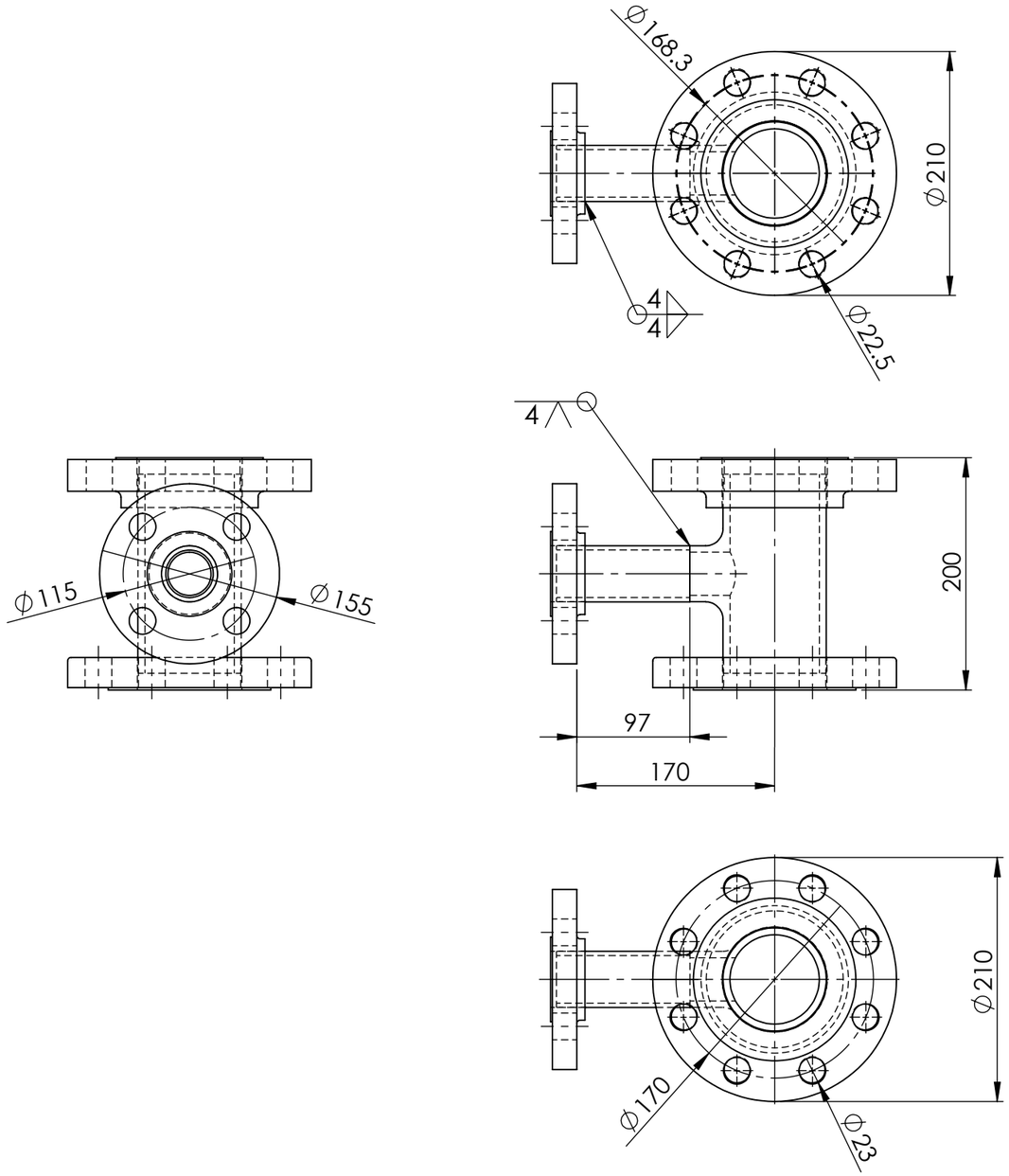

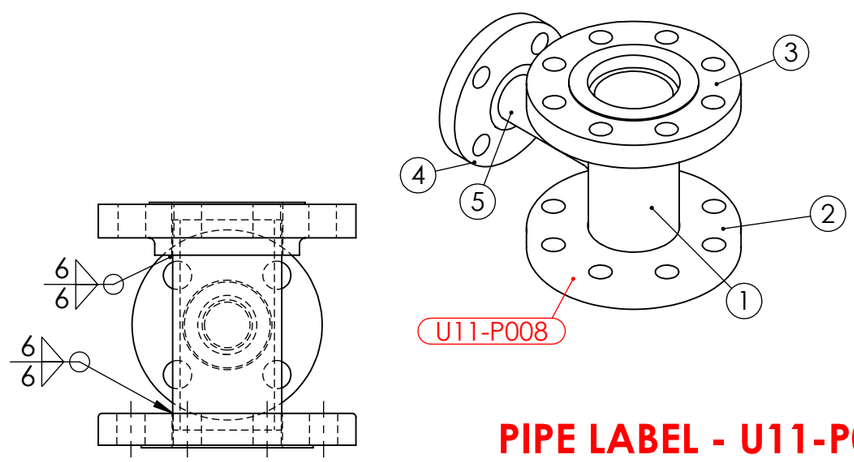

PIPE LABEL - U11-P008

PIPEWORK MANUFACTURED OF A JIG - FLANGES AS PER DRAWING
DIMENSIONS ARE APPROXIMATE

AS INSTALLED 14/3/25

UNIT 11 VALVE 2904 DOWN STREAM PIPE 3 WEIGHT - 16.91 kg

REV	NAME & DATE	DESCRIPTION	UNLESS OTHERWISE SPECIFIED: TOLERANCES: MACHINE + / - 0.25mm FABRICATION + / - 1.0 mm	DRAWN N DE BRUYN 19/04/2024	DRAWING CHECKED
			THIS DRG SUPPLIED BY RODDY ENGINEERING 14 Waratah St, TUMUT NSW 2720 Ph: 02 6947 4039	DESIGNED	DESIGN CHECKED
				SCALE 1:5 WORK ORDER No	APPROVED
			DRAWING No. 11-2904-3 REV:	SECTION No/KKS	A3 SHEET SIZE

snowyhydro LIMITED

M2 POWER STATION UNIT 11
VALVE 2904 DOWN STREAM PIPE 3

SMA-DRG-NO

REV

SHEET 7 OF 7

0,0