DIMENSIONS IN MILLIMETRES

ITEM	DRAWING No	DESCRIPTION	QTY.	MASS (kg)
1	OEM-100NB-T-40-316L	100NB BUTT WELD TEE SHED 40 316L S/S	1	4.0
2	OEM-100NB-JIS30K-C-O-316L	100NB FLANGE JIS 30 K TYPE C 316L S/S MACHINED ORING GROOVE	1	7.95
3	OEM-100NB-JIS30K-C-M-316L	100NB FLANGE JIS 30 K TYPE C 316L S/S MACHINED	2	8.10
4	OEM-100-LR-40-316L	100NB LONG RADIUS BEND 316L S/S SHED 40	3	3.9
5	OEM-50NB-300-SO-M-316L	50NB ANSI 300 Lb SLIP ON FLANGE MACHINED NECK 316L S/S	1	2.78
6	11-2916-1-1	100NB & 80 SHED 40 PIPE 316 S/S	1	31.11

RED EYE QR CODE AREA

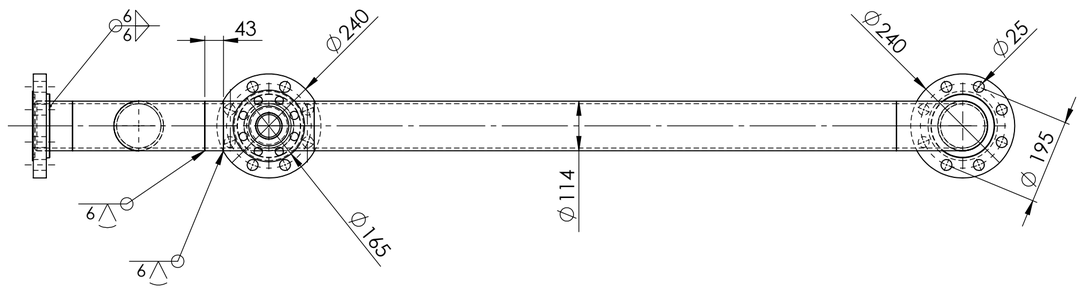

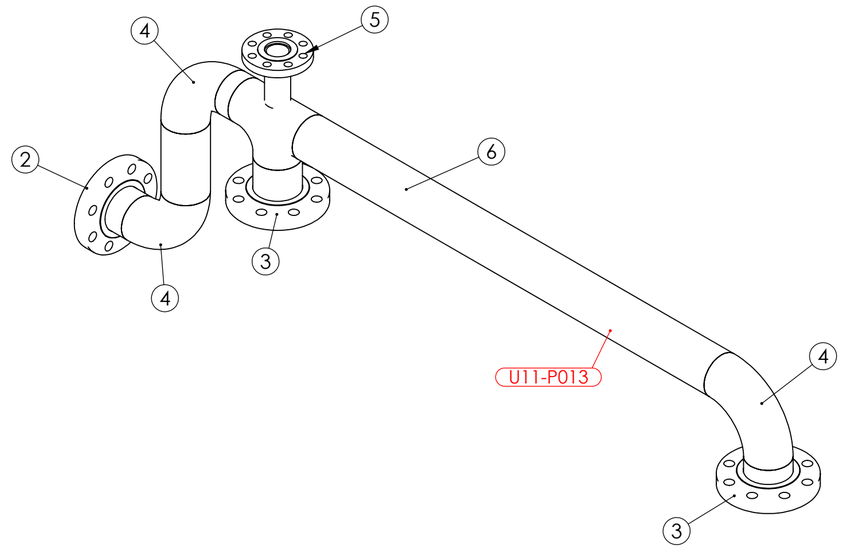

PIPE LABEL - U11-P013

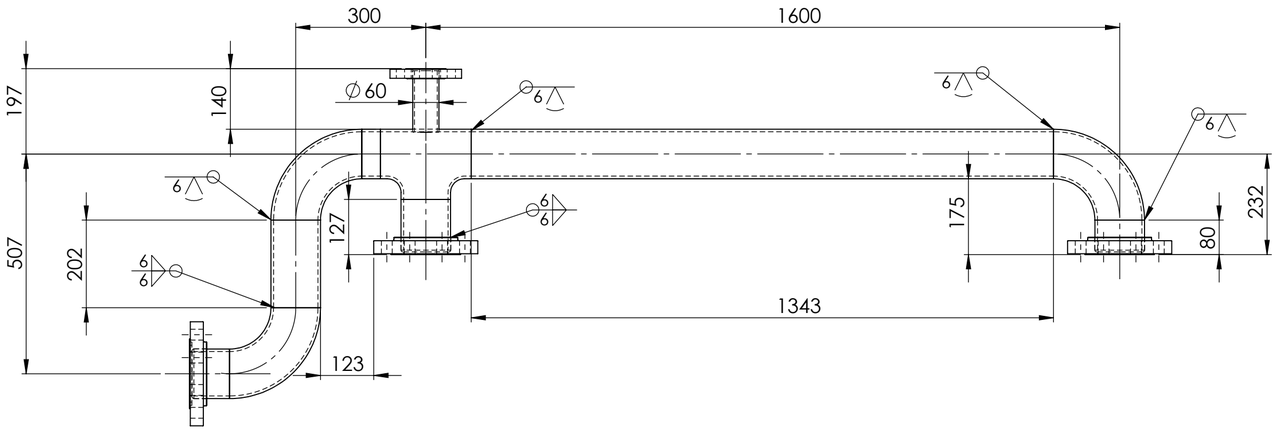

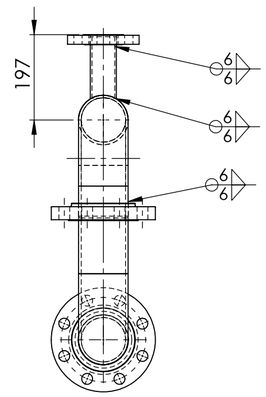

PIPEWORK MANUFACTURED OF A JIG - FLANGES AS PER DRAWING
DIMENSIONS ARE APPROXIMATE

AS INSTALLED 14/3/25

UNIT 11 VALVE 2916 DOWN STREAM PIPE WEIGHT73.77 kg

REV	NAME & DATE	DESCRIPTION

UNLESS OTHERWISE SPECIFIED:
TOLERANCES: MACHINE + / - 0.25mm
FABRICATION + / - 1.0 mm

THIS DRG SUPPLIED BY
RODDY ENGINEERING
14 Waratah St, TUMUT NSW 2720
Ph: 02 6947 4039

DRAWING No. 11-2916-1
REV:

DRAWN N DE BRUYN 19/03/2024
DRAWING CHECKED
DESIGNED
DESIGN CHECKED
SCALE 1:10
WORK ORDER No
APPROVED
SECTION No/KKS
A2 SHEET SIZE

snowyhydro LIMITED

M2 POWER STAION UNIT 11
VALVE 2916 DOWN STREAM PIPE

SMA-DRG-NO

REV

SHEET 1 OF 1