ITEM	DRAWING No	DESCRIPTION	QTY.	MASS (kg)
1	OEM-100NB-JIS30K-C-M-316L	100NB FLANGE JIS 30 K TYPE C 316L S/S MACHINED	1	8.10
2	OEM-100NB-300-SO-316L	100NB - 300lb SLIP ON FLANGE 316L S/S	1	9.53
3	OEM-100-LR-40-316L	100NB LONG RADIUS BEND 316L S/S SHED 40	1	3.9
4	OEM-1_2-BSPP-3000-316L	1/2 BSPP 3000 Lb HALF COUPLING 316L S/S	1	0.06
5	11-2916-A-1	100NB SHED 40 PIPE 316 S/S	1	1.80

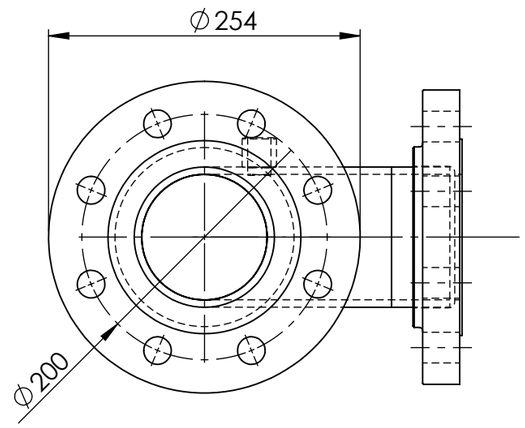

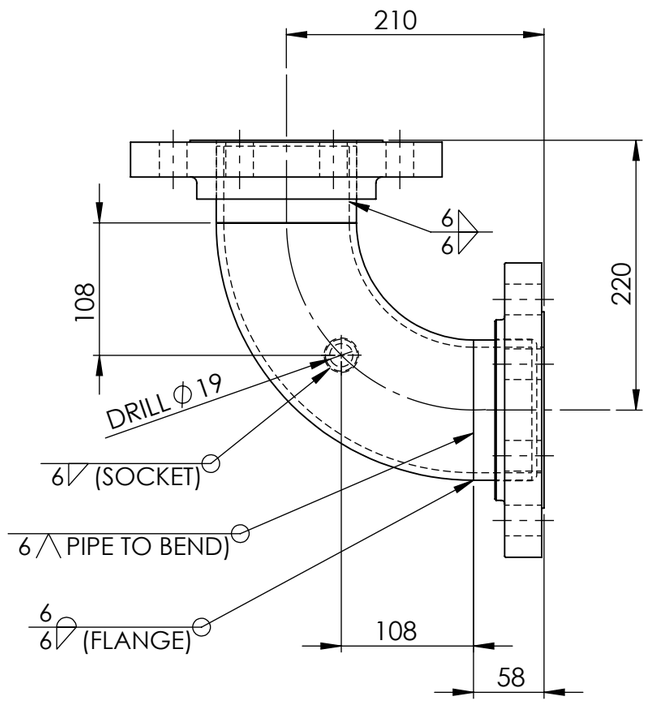

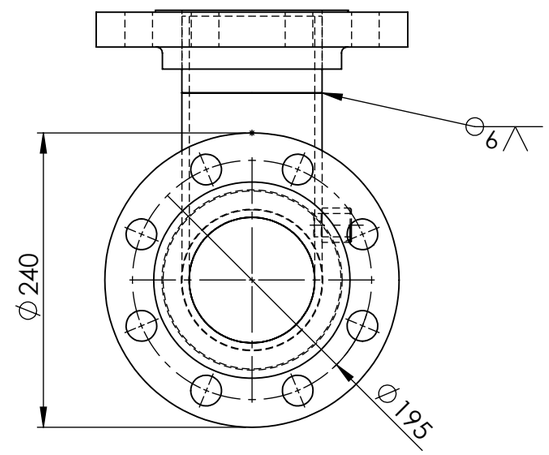

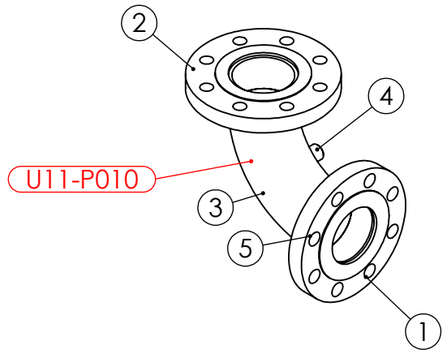

PIPE LABEL - U11-P010

PIPEWORK MANUFACTURED OF A JIG - FLANGES AS PER DRAWING
DIMENSIONS ARE APPROXIMATE

AS INSTALLED 14/3/25

UNIT 11 VALVE 2916-A UP STREAM PIPE WEIGHT - 23.40 kg

REV	NAME & DATE	DESCRIPTION

UNLESS OTHERWISE SPECIFIED:
TOLERANCES: MACHINE + / - 0.25mm
FABRICATION + / - 1.0 mm

THIS DRG SUPPLIED BY
RODDY ENGINEERING
14 Waratah St, TUMUT NSW 2720
Ph: 02 6947 4039

DRAWING No. 11-2916-A
REV:

DRAWN N DE BRUYN 19/03/2024
DRAWING CHECKED
DESIGNED
DESIGN CHECKED
SCALE 1:5
APPROVED
WORK ORDER No
SECTION No/KKS
A3 SHEET SIZE

snowyhydro LIMITED

M2 POWER STATION UNIT 11
VALVE 2916-A UP STREAM PIPE

SMA-DRG-NO

REV

SHEET 1 OF 1

0,0