ITEM	DRAWING No	DESCRIPTION	QTY.	MASS (kg)
1	OEM-100NB-PN25-SO-316L	100NB FLANGE PN25 SLIP ON 316L S/S	1	5.99
2	OEM-100NB-300-SO-316L	100NB - 300lb SLIP ON FLANGE 316L S/S	1	9.53
3	OEM-100-LR-40-316L	100NB LONG RADIUS BEND 316L S/S SHED 40	1	3.9
4	J003435-53	100NB SHED 40 PIPE x 135 DEGREE BEND 356R	1	20.70
5	J003435-51	100NB SHED 40 PIPE x 90 DEGREE BEND 356R	1	98.30
6	11-2919-1-1	100NB SHED 40 PIPE 316 S/S	1	2.17

RED EYE QR CODE AREA

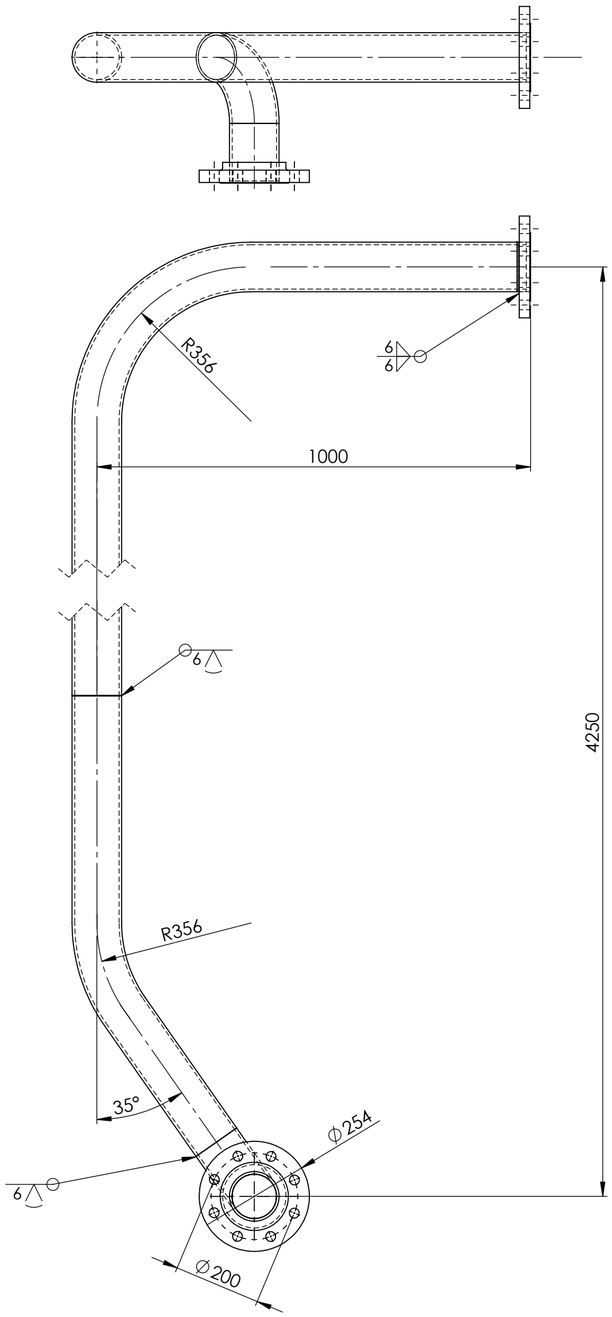

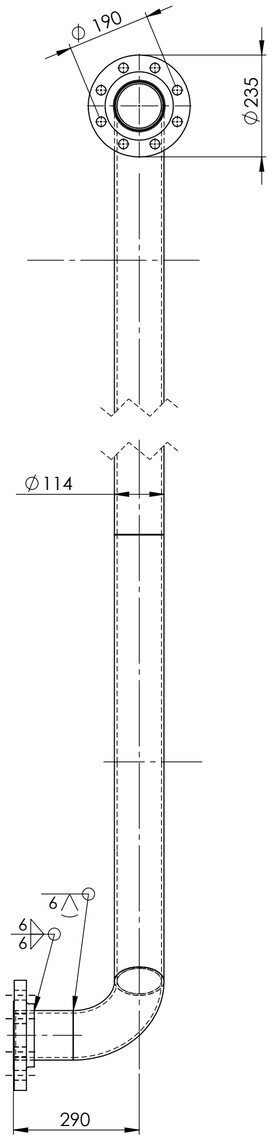

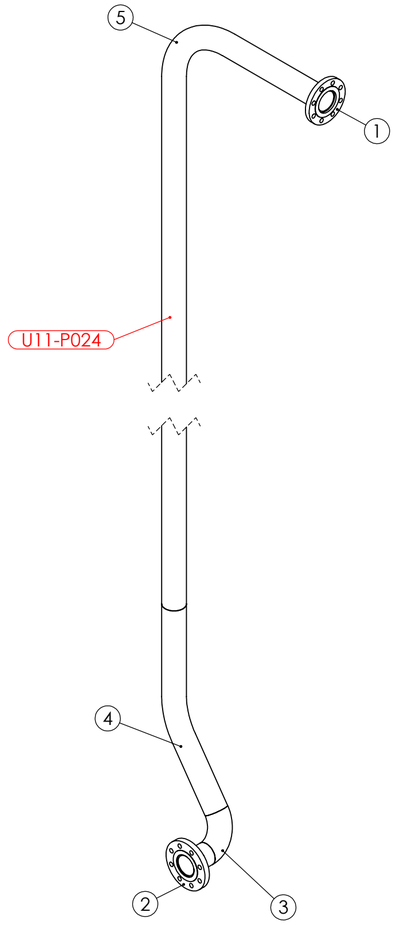

PIPE LABEL - U11-P024

AS INSTALLED 14/3/25

PIPEWORK MANUFACTURED OF A JIG - FLANGES AS PER DRAWING
DIMENSIONS ARE APPROXIMATE

UNIT 11 VALVE 2921 DOWN STREAM PIPE 1 WEIGHT - 103.98 kg

REV	NAME & DATE	DESCRIPTION

UNLESS OTHERWISE SPECIFIED:
TOLERANCES: MACHINE + / - 0.25mm
FABRICATION + / - 1.0 mm

THIS DRG SUPPLIED BY
RODDY ENGINEERING
14 Waratah St, TUMUT NSW 2720
Ph: 02 6947 4039

DRAWN: N DE BRUYN 18/03/2024
DRAWING CHECKED
DESIGNED
DESIGN CHECKED
SCALE 1:10
APPROVED
WORK ORDER No
SECTION No/KKS
A2 SHEET SIZE

snowyhydro LIMITED

M2 POWER STATION UNIT 11
VALVE 2919 DOWNSTREAM PIPE 1

DRAWING No. 11-2919-1 REV: 0

SMA-DRG-NO

REV

SHEET 1 OF 1