DIMENSIONS IN MILLIMETRES

ITEM	DRAWING No	DESCRIPTION	QTY.	MASS (kg)
1	OEM-100NB-PN25-SO-316L	100NB FLANGE PN25 SLIP ON 316L S/S	2	5.99
2	J003435-67-15	100NB SHED 40 PIPE x 90 DEGREE BEND 356R	1	17.13
3	J003435-67-10	100NB SHED 40 PIPE x 150 DEGREE BEND 305R	2	15.67
4	11-2919-3-2	100NB SHED 40 PIPE 316 S/S	1	77.07

RED EYE QR CODE AREA

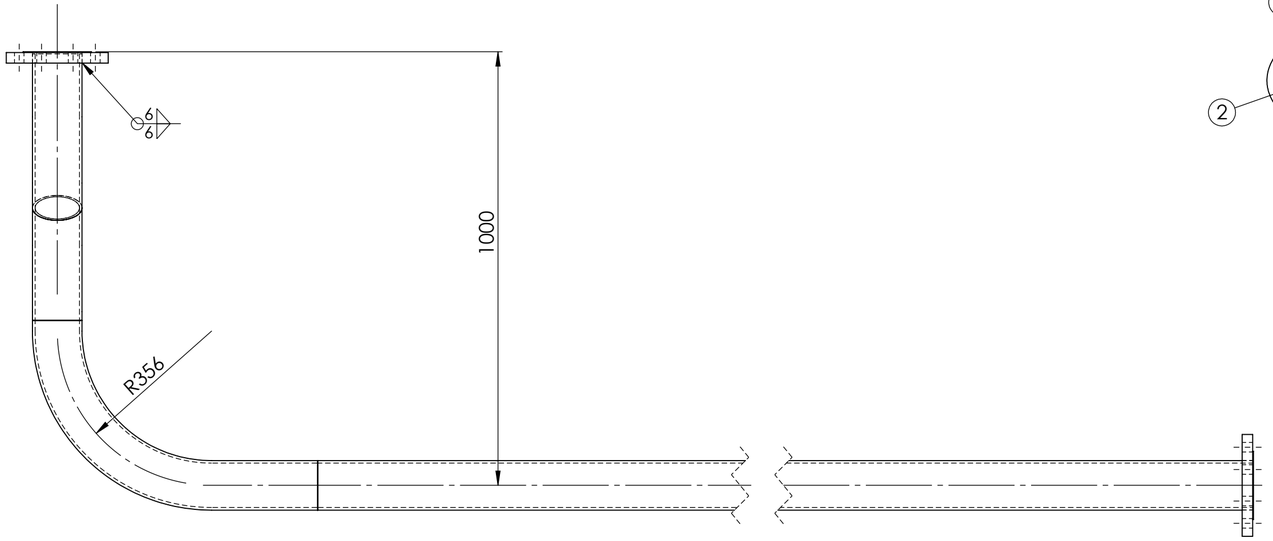

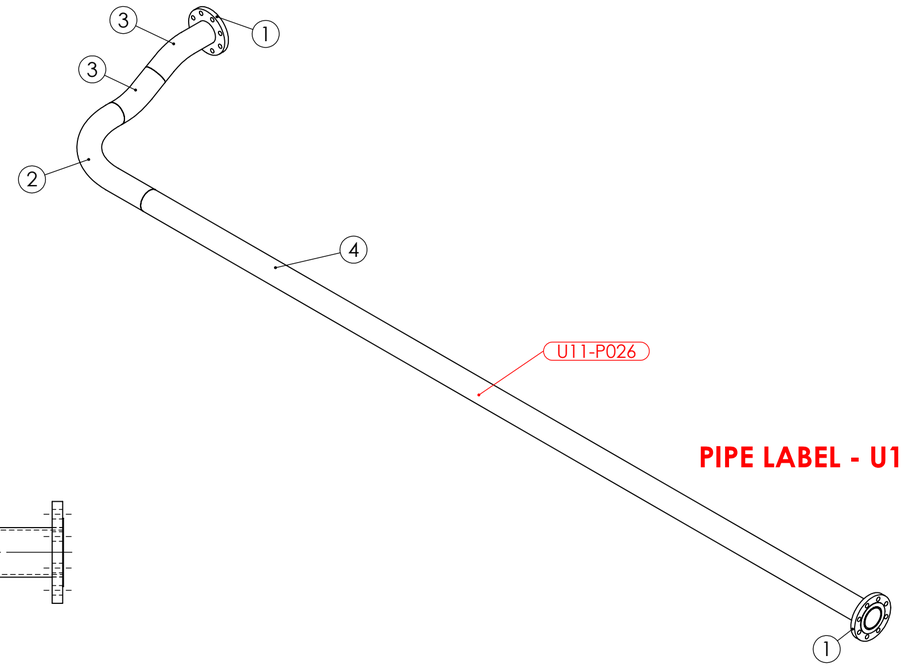

PIPE LABEL - U11-P026

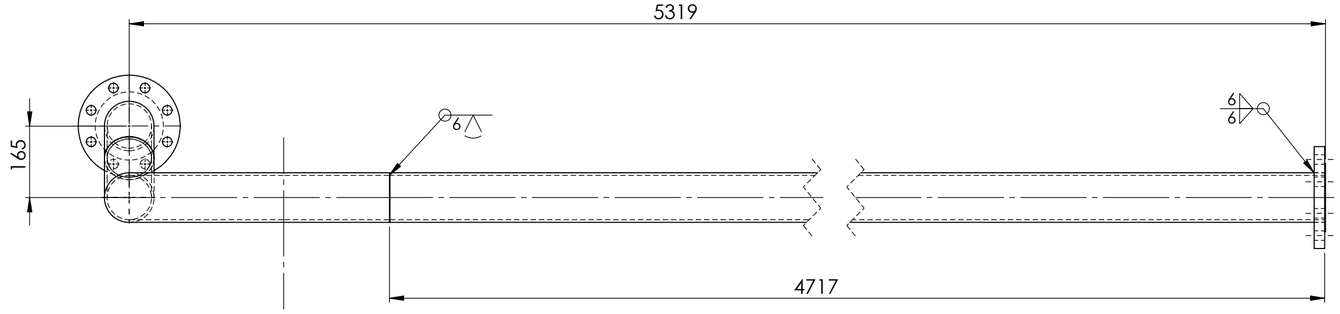

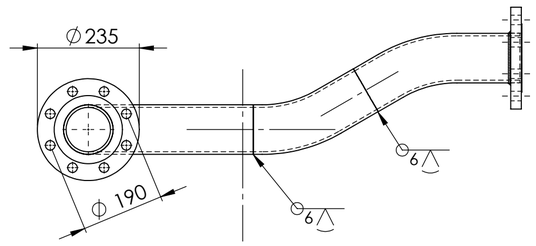

AS INSTALLED 14/3/25

PIPEWORK MANUFACTURED OF A JIG - FLANGES AS PER DRAWING
DIMENSIONS ARE APPROXIMATE

UNIT 11 VALVE 2919 DOWNSTREAM PIPE 3 WEIGHT - 113.23 kg

REV	NAME & DATE	DESCRIPTION

UNLESS OTHERWISE SPECIFIED:
TOLERANCES: MACHINE + / - 0.25mm
FABRICATION + / - 1.0 mm

THIS DRG SUPPLIED BY
RODDY ENGINEERING
14 Waratah St, TUMUT NSW 2720
Ph: 02 6947 4039

DRAWING No. 11-2919-3 REV:

DRAWN N DE BRUYN 19/03/2024
DRAWING CHECKED
DESIGNED
DESIGN CHECKED
SCALE 1:10
WORK ORDER No
APPROVED
SECTION No/KKS
A2 SHEET SIZE

snowyhydro LIMITED

M2 POWER STATION UNIT 11
VALVE 2919 DOWNSTREAM PIPE 3

SMA-DRG-NO

REV

SHEET 1 OF 1