594,420

DIMENSIONS IN MILLIMETRES

ITEM	DRAWING No	DESCRIPTION	QTY.	MASS (kg)
1	OEM-100X80-CR-40-316	100NB x 80NB CONCENTRIC REDUCER SHED 40 316L S/S	1	1.5
2	OEM-100NB-PN25-SO-316L	100NB FLANGE PN25 SLIP ON 316L S/S	1	5.99
3	OEM-80NB-300-SF-316L	80NB - 300lb SLIP ON FLANGE 316L S/S	1	6.08
4	J003435-54	80NB SHED 40 PIPE x 90 DEGREE BEND 375R	1	24.08
5	11-2919-6-1	80NB SHED 40 PIPE 316 S/S	1	3.27

RED EYE QR CODE AREA

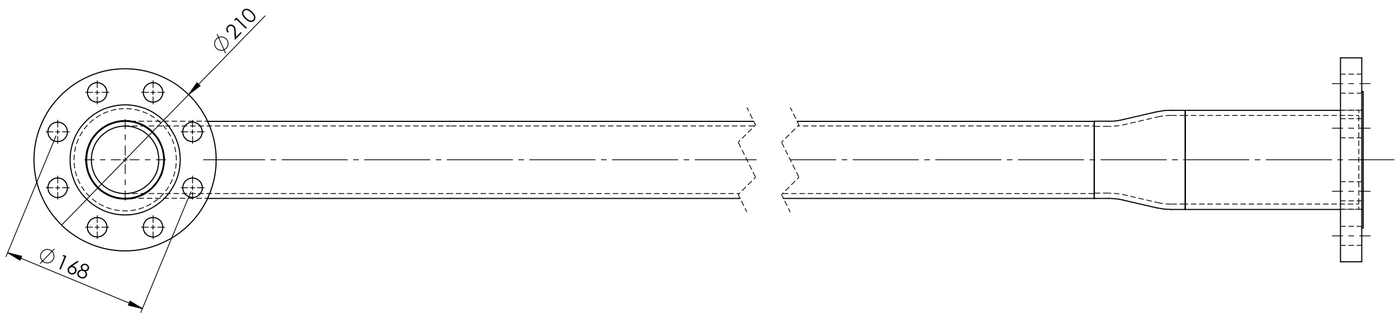

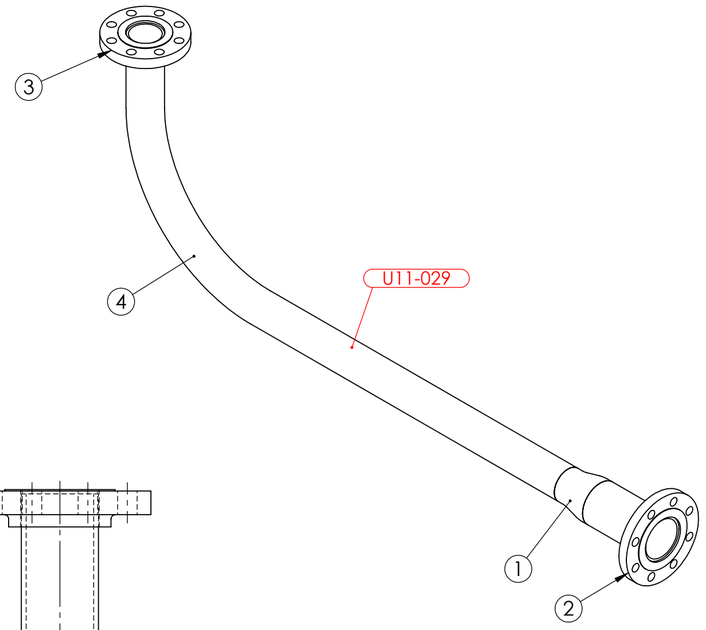

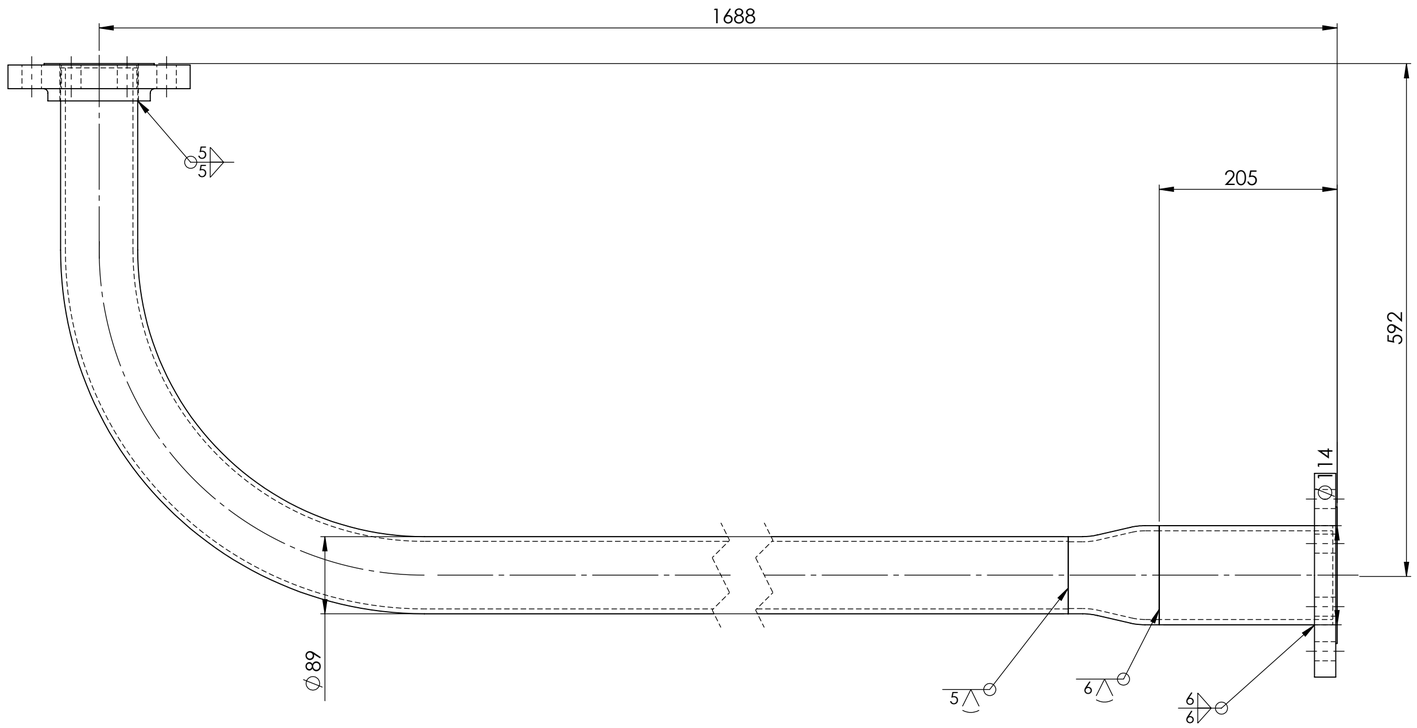

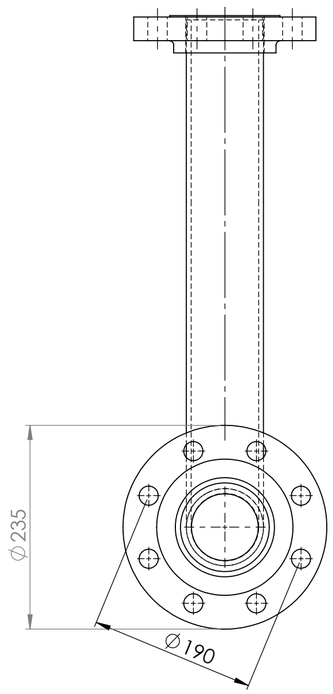

PIPE LABEL - U11-P029

AS INSTALLED 14/3/25

PIPEWORK MANUFACTURED OF A JIG - FLANGES AS PER DRAWING
DIMENSIONS ARE APPROXIMATE

UNIT 11 VALVE 2919 DOWN STREAM PIPE 6 WEIGHT - 37.64 kg

REV	NAME & DATE	DESCRIPTION

UNLESS OTHERWISE SPECIFIED:
TOLERANCES: MACHINE + / - 0.25mm
FABRICATION + / - 1.0 mm

THIS DRG SUPPLIED BY
RODDY ENGINEERING
14 Waratah St, TUMUT NSW 2720
Ph: 02 6947 4039

DRAWN: N DE BRUYN 23/03/2024
DRAWING CHECKED
DESIGNED
DESIGN CHECKED
SCALE 1:5
APPROVED
WORK ORDER No
SECTION No/KKS
A2 SHEET SIZE

snowyhydro LIMITED

M2 POWER STATION UNIT 11
VALVE 2919 DOWN STREAM PIPE 6

DRAWING No. 11-2919-6
REV:

SMA-DRG-NO

REV

SHEET 1 OF 1

0,0