594,420

DIMENSIONS IN MILLIMETRES

ITEM	DRAWING No	DESCRIPTION	QTY.	MASS (kg)
1	OEM-MY-20x74	20 DIA MYLAR INSULATION SLEEVE 74 LONG	8	0.00
2	OEM-100NB-PN25-15	100NB PN25 1.5mm C-4400 GASKET	5	
3	OEM-80NB-JIS30K-3	80NB JIS30K 3.0mm C-4430 GASKET	1	0.1
4	OEM-80NB-300-15	80NB 300LB 1.5mm C-4400 GASKET	1	0
5	11-2919-7	UNIT 11 VALVE 2919 DOWN STREAM PIPE 7	1	18.43
6	11-2919-6	UNIT 11 VALVE 2919 DOWN STREAM PIPE 6	1	37.64
7	11-2919-5	UNIT 11 VALVE 2919 DOWN STREAM PIPE 5	1	97.11
8	11-2919-4	UNIT 11 VALVE 2919 DOWN STREAM PIPE 4	1	80.41
9	11-2919-3	UNIT 11 VALVE 2919 DOWNSTREAM PIPE 3	1	113.23
10	11-2919-2	UNIT 11 VALVE 2919 DOWN STREAM PIPE 2	1	90.36
11	11-2919-1	UNIT 11 VALVE 2921 DOWN STREAM PIPE 1	1	103.98
12		M20 FLAT WASHER 304 S/S (37x22x2)	96	
13		M20 G10 EXPOY WASHER	16	
14		M20 THICK FLAT WASHER 304 S/S (37x22x3)	16	
15		M20x2.5 NUT 304 S/S	8	
16		M20x2.5 NUT 304 S/S	48	
17		M20x2.5 x 80 HEX BOLT 304 S/S	40	0.3
18		M20x2.5 x 90 HEX BOLT 304 S/S	8	0.3
19		M20x2.5 x 90 HEX BOLT 304 S/S	8	0.3

RED EYE QR CODE AREA

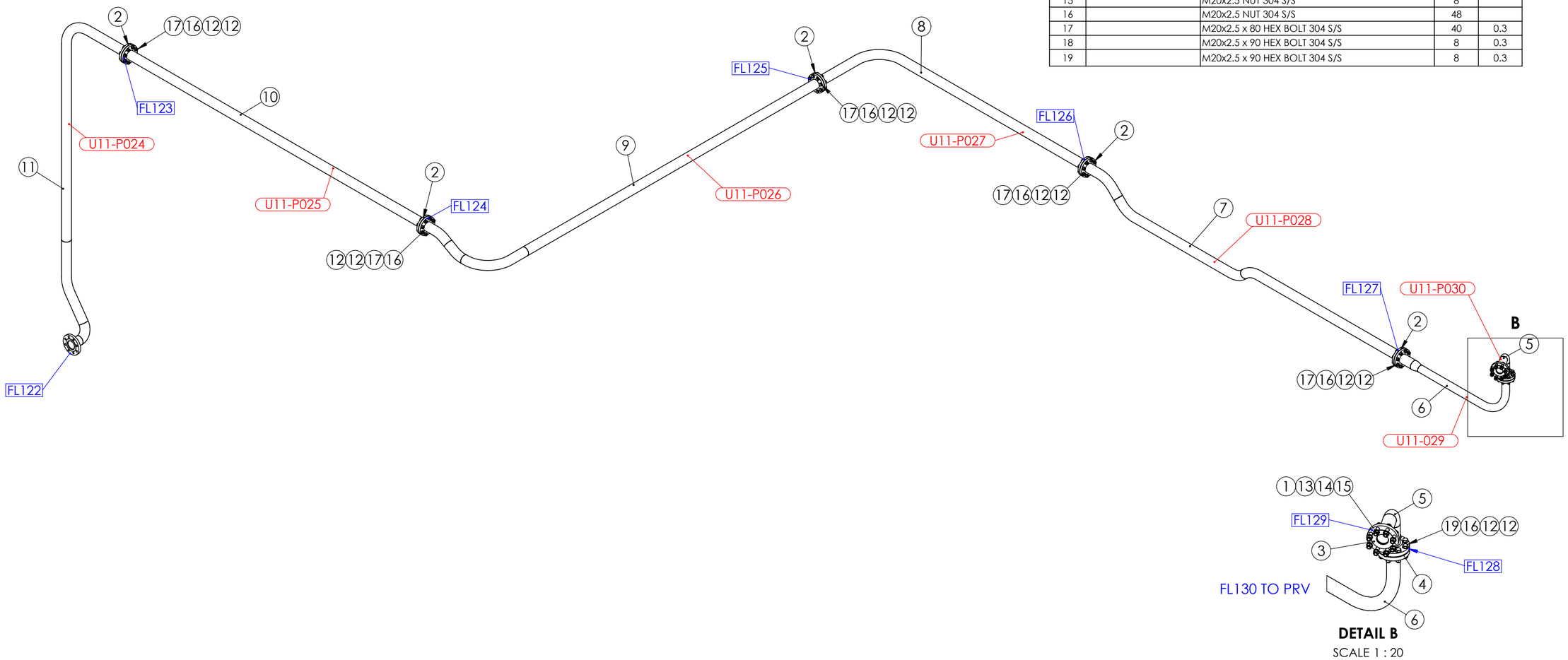

AS INSTALLED 14/3/25

PIPEWORK MANUFACTURED OF A JIG - FLANGES AS PER DRAWING
DIMENSIONS ARE APPROXIMATE

UNIT 11 VALVE 2919 DOWN STREAM PIPE ASSEMBLY WEIGHT - 564.74 kg

REV	NAME & DATE	DESCRIPTION

UNLESS OTHERWISE SPECIFIED:
TOLERANCES: MACHINE + / - 0.25mm
FABRICATION + / - 1.0 mm

THIS DRG SUPPLIED BY
RODDY ENGINEERING
14 Waratah St, TUMUT NSW 2720
Ph: 02 6947 4039

DRAWING No. 11-2919
REV:

DRAWN N DE BRUYN 19/03/2024
DRAWING CHECKED
DESIGNED
DESIGN CHECKED
SCALE 1:10
WORK ORDER No
APPROVED
SECTION No/KKS
A2 SHEET SIZE

snowyhydro LIMITED

M2 POWER STATION UNIT 11
VALVE 2919 DOWN STREAM PIPE ASSEMBLY

SMA-DRG-NO

REV

SHEET 1 OF 2

0,0

DIMENSIONS IN MILLIMETRES

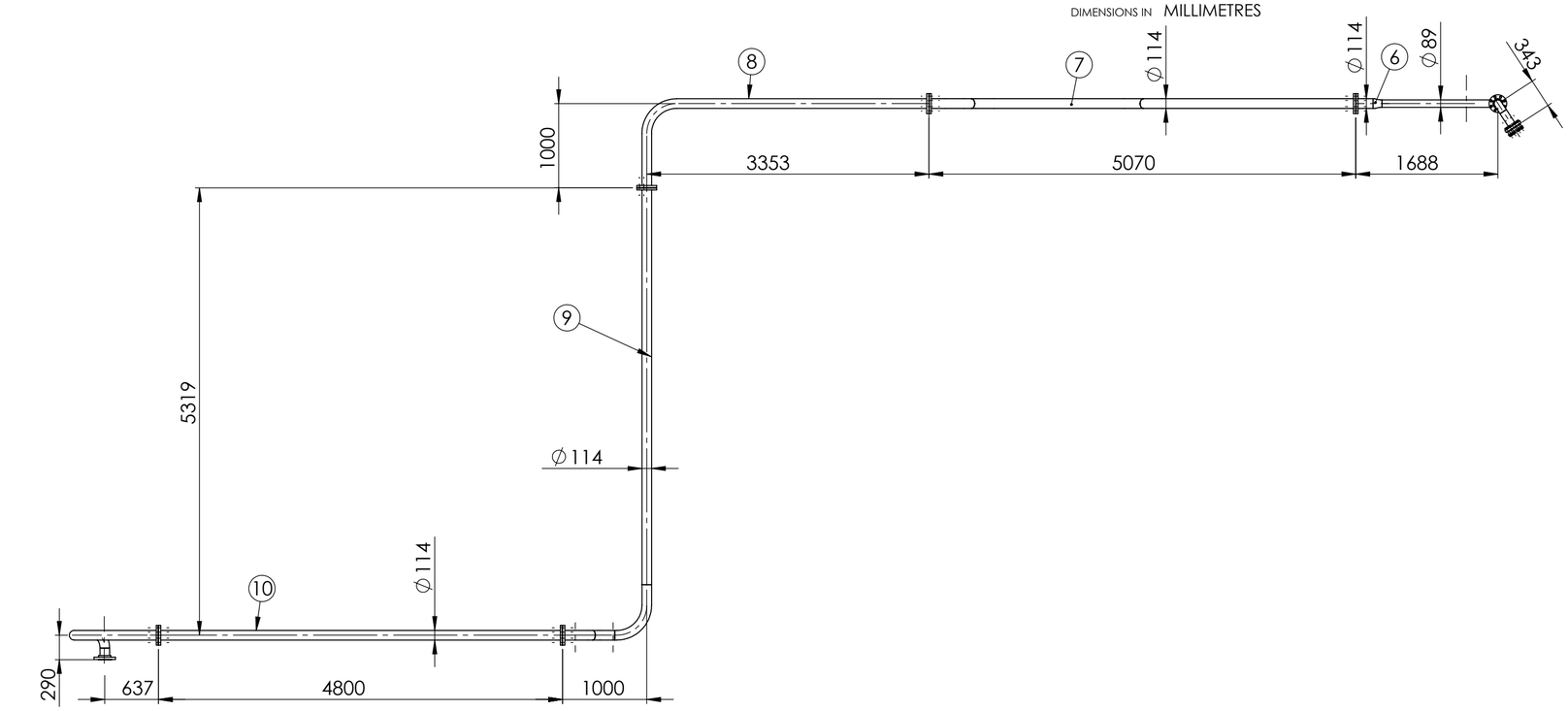

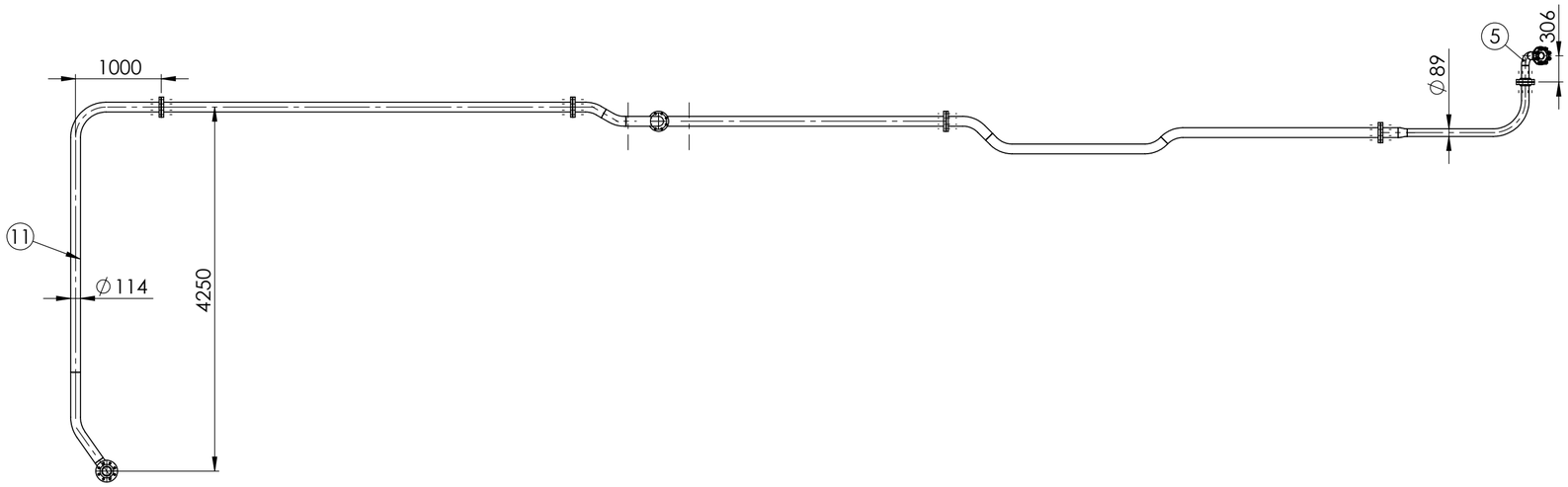

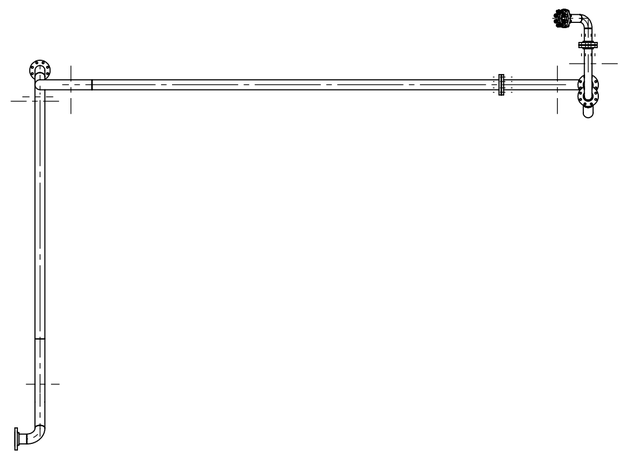

ITEM	DRAWING No	DESCRIPTION	QTY.	MASS (kg)
1	OEM-MY-20x74	20 DIA MYLAR INSULATION SLEEVE 74 LONG	8	0.00
2	OEM-100NB-PN25-15	100NB PN25 1.5mm C-4400 GASKET	5	
3	OEM-80NB-JIS30K-3	80NB JIS30K 3.0mm C-4430 GASKET	1	0.1
4	OEM-80NB-300-15	80NB 300LB 1.5mm C-4400 GASKET	1	0
5	11-2919-7	UNIT 11 VALVE 2919 DOWN STREAM PIPE 7	1	18.43
6	11-2919-6	UNIT 11 VALVE 2919 DOWN STREAM PIPE 6	1	37.64
7	11-2919-5	UNIT 11 VALVE 2919 DOWN STREAM PIPE 5	1	97.11
8	11-2919-4	UNIT 11 VALVE 2919 DOWN STREAM PIPE 4	1	80.41
9	11-2919-3	UNIT 11 VALVE 2919 DOWNSTREAM PIPE 3	1	113.23
10	11-2919-2	UNIT 11 VALVE 2919 DOWN STREAM PIPE 2	1	90.36
11	11-2919-1	UNIT 11 VALVE 2921 DOWN STREAM PIPE 1	1	103.98
12		M20 FLAT WASHER 304 S/S (37x22x2)	96	
13		M20 G10 EXPOY WASHER	16	
14		M20 THICK FLAT WASHER 304 S/S (37x22x3)	16	
15		M20x2.5 NUT 304 S/S	8	
16		M20x2.5 NUT 304 S/S	48	
17		M20x2.5 x 80 HEX BOLT 304 S/S	40	0.3
18		M20x2.5 x 90 HEX BOLT 304 S/S	8	0.3
19		M20x2.5 x 90 HEX BOLT 304 S/S	8	0.3

RED EYE QR CODE AREA

PIPEWORK MANUFACTURED OF A JIG - FLANGES AS PER DRAWING
DIMENSIONS ARE APPROXIMATE

UNIT 11 VALVE 2919 DOWN STREAM PIPE ASSEMBLY WEIGHT - 545.96 kg

AS INSTALLED 14/3/25

REV	NAME & DATE	DESCRIPTION

UNLESS OTHERWISE SPECIFIED:
TOLERANCES: MACHINE + / - 0.25mm
FABRICATION + / - 1.0 mm

THIS DRG SUPPLIED BY
RODDY ENGINEERING
14 Waratah St, TUMUT NSW 2720
Ph: 02 6947 4039

DRAWING No. 11-2919 REV:

DRAWN N DE BRUYN 19/03/2024
DRAWING CHECKED
DESIGNED
DESIGN CHECKED
SCALE 1:50
WORK ORDER No
APPROVED
SECTION No/KKS
A2 SHEET SIZE

snowyhydro LIMITED

M2 POWER STATION UNIT 11
VALVE 2919 DOWN STREAM PIPE ASSEMBLY

SMA-DRG-NO

REV

SHEET 2 OF 2