420, 297

ITEM	DRAWING No	DESCRIPTION	QTY.	MASS (kg)
1	OEM-100NB-300-SO-316L	100NB - 300lb SLIP ON FLANGE 316L S/S	1	9.53
2	OEM-100NB-PN25-SO-316L	100NB FLANGE PN25 SLIP ON 316L S/S	1	5.99
3	J003435-52	100NB SHED 40 PIPE VALVE 2921 PIPE 1	1	70.30

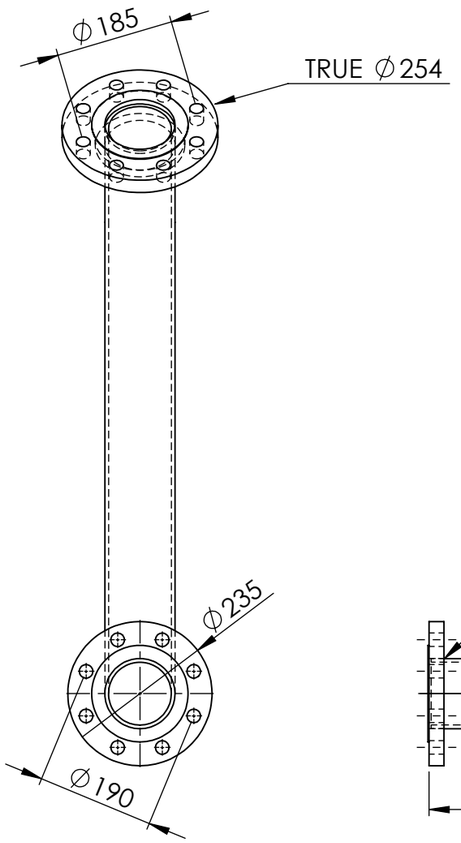

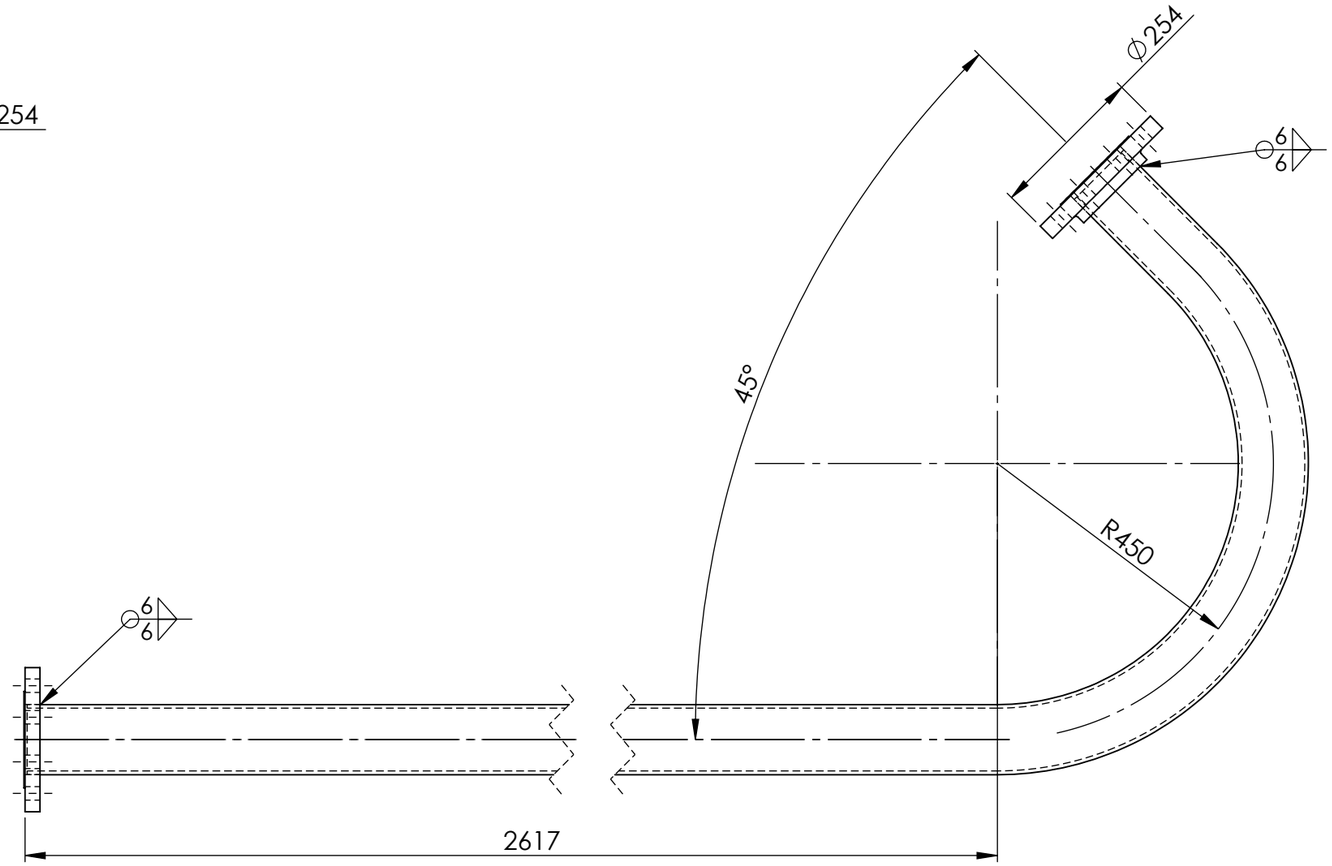

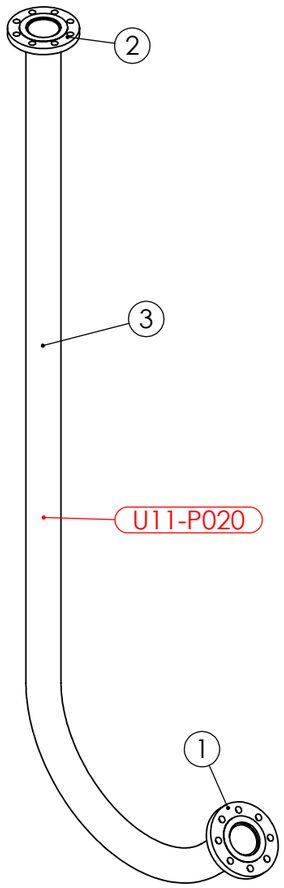

PIPE LABEL - U11-P020

AS INSTALLED 14/3/25

PIPEWORK MANUFACTURED OF A JIG - FLANGES AS PER DRAWING
DIMENSIONS ARE APPROXIMATE

UNIT 11 VALVE 2921 DOWN STREAM PIPE 1 WEIGHT - 79.03 kg

		UNLESS OTHERWISE SPECIFIED: TOLERANCES: MACHINE + / - 0.25mm FABRICATION + / - 1.0 mm	DRAWN N DE BRUYN 18/03/2024	DRAWING CHECKED	snowyhydro LIMITED
		THIS DRG SUPPLIED BY RODDY ENGINEERING 14 Waratah St, TUMUT NSW 2720 Ph: 02 6947 4039	DESIGNED	DESIGN CHECKED	M2 POWER STATION UNIT 11 VALVE 2921 DOWN STREAM PIPE #1
			SCALE 1:10 WORK ORDER No	APPROVED	
REV	NAME & DATE	DESCRIPTION	DRAWING No. 11-2921-1 REV:	SECTION No/KKS	A3 SHEET SIZE	SMA-DRG-NO	REV	SHEET 1 OF 1

0,0