594,420

ITEM	DRAWING No	DESCRIPTION	QTY.	MASS (kg)
1	OEM-100NB-PN25-SO-316L	100NB FLANGE PN25 SLIP ON 316L S/S	2	5.99
2	OEM-100-LR-40-316L	100NB LONG RADIUS BEND 316L S/S SHED 40	1	3.9
3	J003435-51	100NB SHED 40 PIPE x 90 DEGREE BEND 356R	1	98.30
4	J003435-50	100NB SHED 40 PIPE x 165 DEGREE BEND 356R	1	14.69
5	11-2921-3-1	100NB SHED 40 PIPE 316L S/S	1	5.51

RED EYE QR CODE AREA

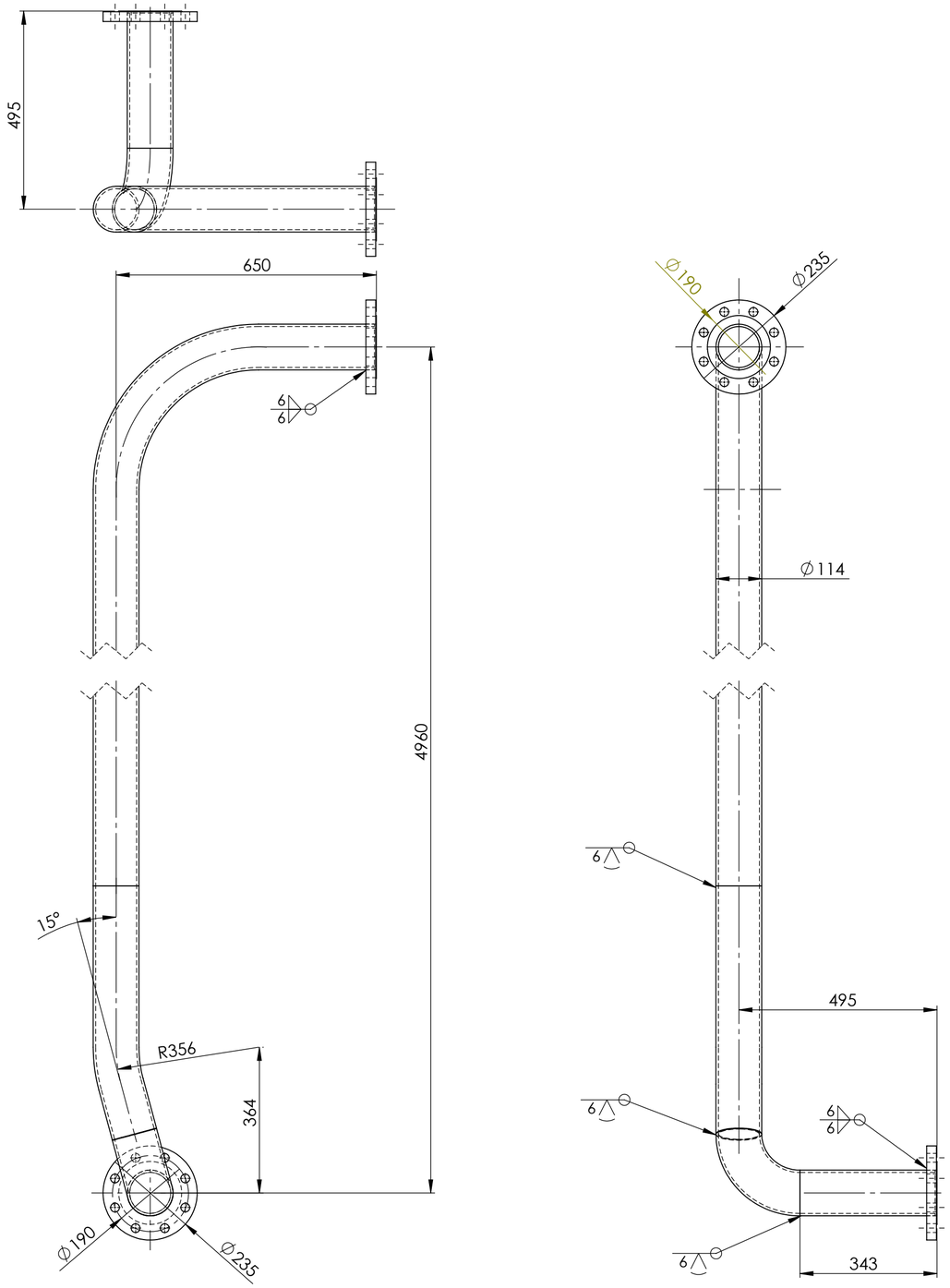

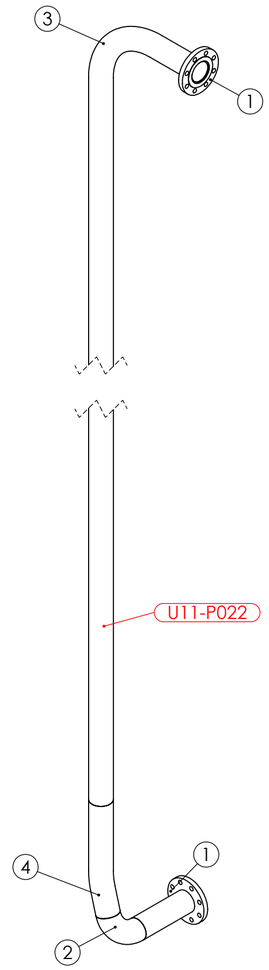

PIPE LABEL - U11-P022

AS INSTALLED 14/3/25

UNIT 11 VALVE 2921 DOWNSTREAM PIPE 3 WEIGHT - 108.16 kg

PIPEWORK MANUFACTURED OF A JIG - FLANGES AS PER DRAWING DIMENSIONS ARE APPROXIMATE

REV	NAME & DATE	DESCRIPTION

UNLESS OTHERWISE SPECIFIED:
TOLERANCES: MACHINE + / - 0.25mm
FABRICATION + / - 1.0 mm

THIS DRG SUPPLIED BY
RODDY ENGINEERING
14 Waratah St, TUMUT NSW 2720
Ph: 02 6947 4039

DRAWN: N DE BRUYN 18/03/2024
DRAWING CHECKED
DESIGNED
DESIGN CHECKED
SCALE 1:10
WORK ORDER No
APPROVED
SECTION No/KKS
A2 SHEET SIZE

snowyhydro LIMITED

M2 POWER STATION UNIT 11
VALVE 2921 DOWNSTREAM PIPE # 3

DRAWING No. 11-2921-3
REV:

SMA-DRG-NO

REV

SHEET 1 OF 1

0,0