DIMENSIONS IN MILLIMETRES

ITEM	DRAWING No	DESCRIPTION	QTY.	MASS (kg)
1	OEM-100-LR-40-316L	100NB LONG RADIUS BEND 316L S/S SHED 40	2	3.9
2	OEM-100NB-JIS30K-C-M-316L	100NB FLANGE JIS 30 K TYPE C 316L S/S MACHINED	1	8.10
3	OEM-100NB-PN25-SO-316L	100NB FLANGE PN25 SLIP ON 316L S/S	1	5.99
4	OEM-1_2-BSPP-3000-316L	1/2 BSPP 3000 Lb HALF COUPLING 316L S/S	1	0.06
5	11-2921-4-1	100NB SHED 40 PIPE 316 S/S	1	48.50

RED EYE QR CODE AREA

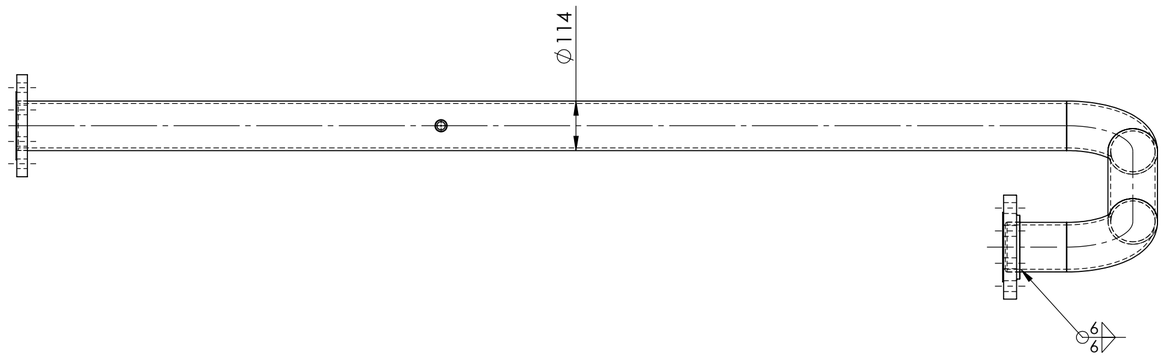

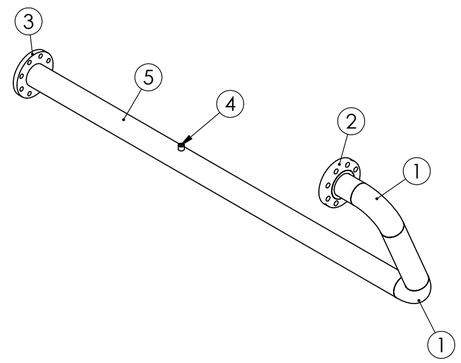

PIPE LABEL - U11-P023

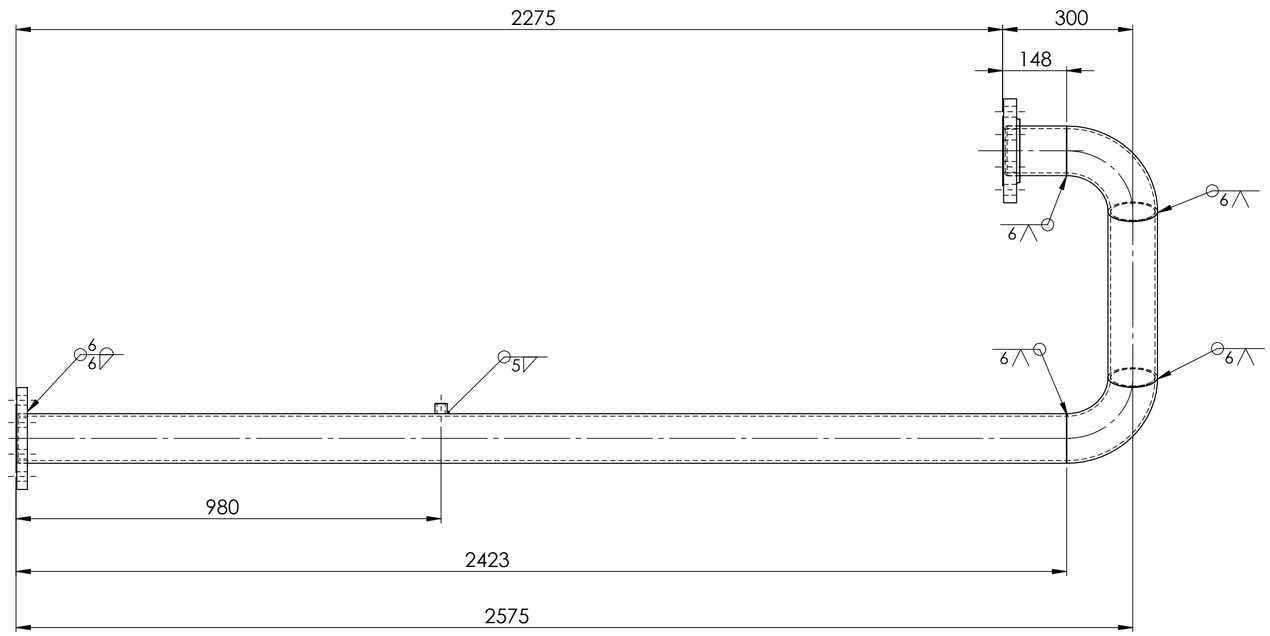

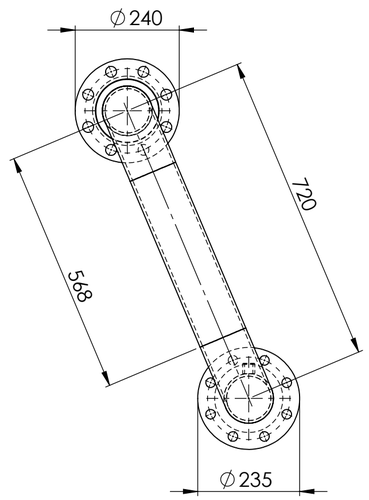

AS INSTALLED 14/3/25

PIPEWORK MANUFACTURED OF A JIG - FLANGES AS PER DRAWING
DIMENSIONS ARE APPROXIMATE

UNIT 11 VALVE 2921 DOWN STREAM PIPE 4 WEIGHT - 70.51 kg

REV	NAME & DATE	DESCRIPTION

UNLESS OTHERWISE SPECIFIED:
TOLERANCES: MACHINE + / - 0.25mm
FABRICATION + / - 1.0 mm

THIS DRG SUPPLIED BY
RODDY ENGINEERING
14 Waratah St, TUMUT NSW 2720
Ph: 02 6947 4039

DRAWING No. 11-2921-4
REV:

DRAWN N DE BRUYN 19/03/2024
DRAWING CHECKED
DESIGNED
DESIGN CHECKED
SCALE 1:10
WORK ORDER No
APPROVED
SECTION No/KKS
A2 SHEET SIZE

snowyhydro LIMITED

M2 POWER STAION UNIT 11
VALVE 2921 DOWN STREAM PIPE # 4

SMA-DRG-NO

REV

SHEET 1 OF 1