ITEM	DRAWING No	DESCRIPTION	QTY.	MASS (kg)
1	OEM-100NB-T-40-316L	100NB BUTT WELD TEE SHED 40 316L S/S	1	4.0
2	OEM-100NB-JIS30K-C-O-316L	100NB FLANGE JIS 30 K TYPE C 316L S/S MACHINED ORING GROOVE	1	7.95
3	OEM-100NB-300-SO-316L	100NB - 300lb SLIP ON FLANGE 316L S/S	2	9.53
4	OEM-1_2-BSPP-3000-316L	1/2 BSPP 3000 Lb HALF COUPLING 316L S/S	1	0.06
5	11-2923-1-1	100NB SHED 40 PIPE 316 S/S	1	10.17

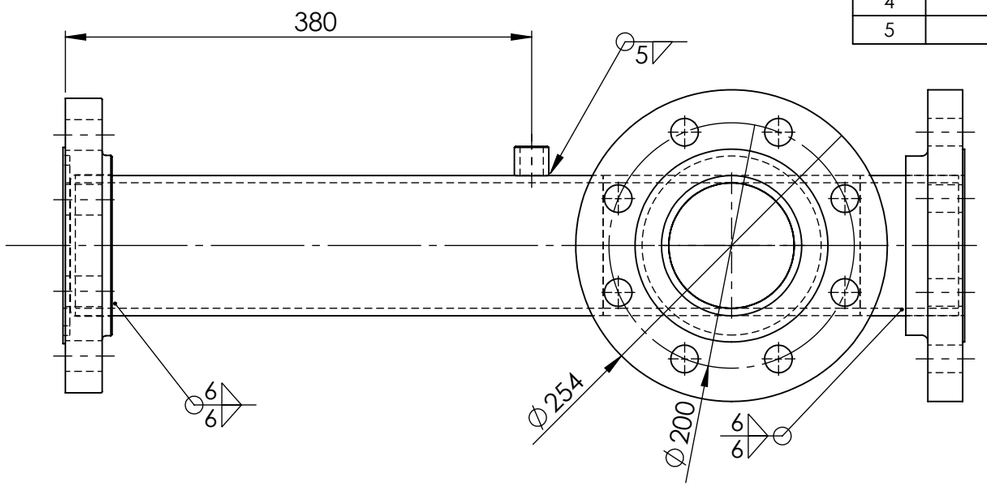

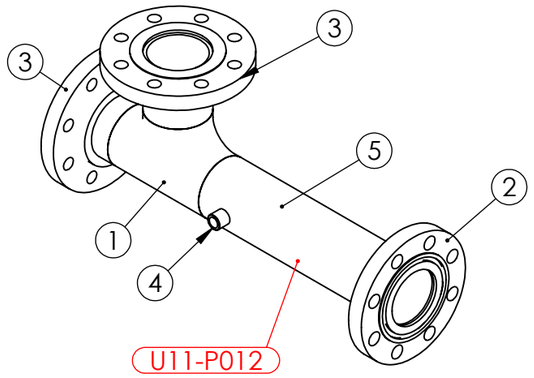

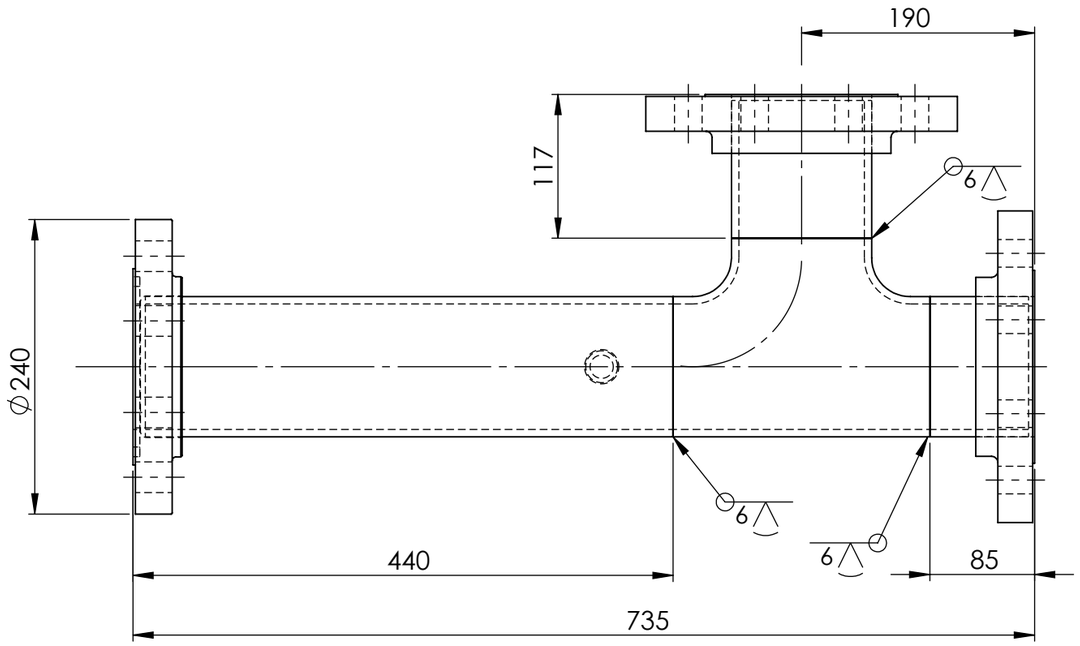

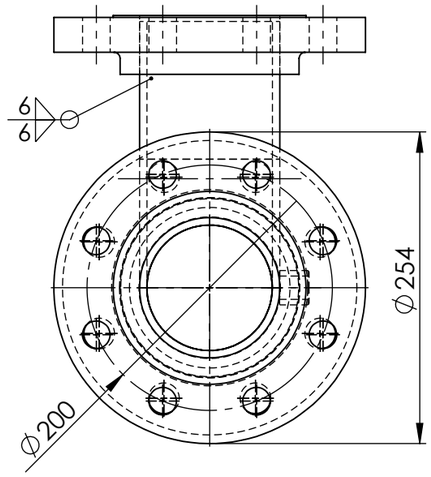

PIPE LABEL - U11-P012

AS INSTALLED 14/3/25

PIPEWORK MANUFACTURED OF A JIG - FLANGES AS PER DRAWING
DIMENSIONS ARE APPROXIMATE

UNIT 11 VALVE 2923 DOWN STREAM PIPE WEIGHT - 41.20 kg

REV	NAME & DATE	DESCRIPTION

UNLESS OTHERWISE SPECIFIED:
TOLERANCES: MACHINE + / - 0.25mm
FABRICATION + / - 1.0 mm

THIS DRG SUPPLIED BY
RODDY ENGINEERING
14 Waratah St, TUMUT NSW 2720
Ph: 02 6947 4039

DRAWING No. 11-2923-1
REV:

DRAWN N DE BRUYN 19/03/2024
DRAWING CHECKED
DESIGNED
DESIGN CHECKED
SCALE 1:5
WORK ORDER No
APPROVED
SECTION No/KKS
A3 SHEET SIZE

snowyhydro LIMITED

M2 POWER STATION UNIT 11
VALVE 2923 DOWN STREAM PIPE

SMA-DRG-NO

REV

SHEET 1 OF 1

0,0