ITEM	DRAWING No	DESCRIPTION	QTY.	MASS (kg)
1	OEM-80NB-300-SF-316L	80NB - 300lb SLIP ON FLANGE 316L S/S	1	6.08
2	11-2925-1-1	80NB SHED 10 PIPE 316L SS VICTAULIC GROOVED	1	1.52

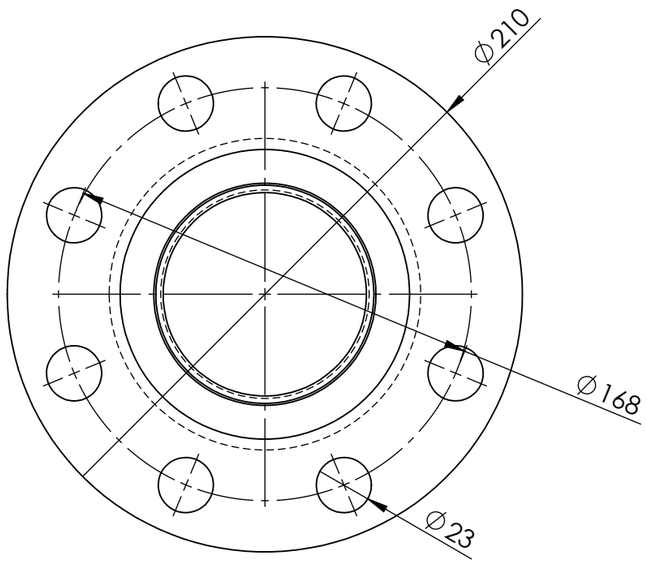

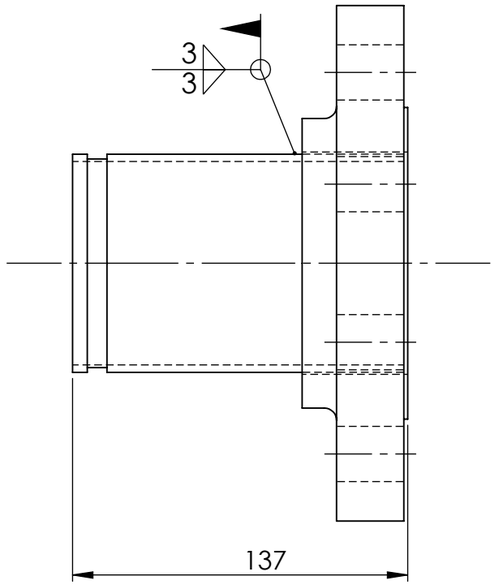

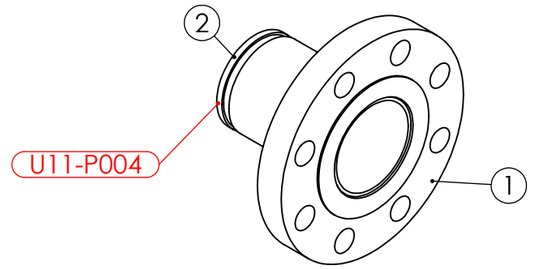

PIPE LABEL - U11-P004

AS INSTALLED 14/3/25

UNIT 11 VALVE 2925-1 DOWN STREAM PIPE 1 WEIGHT - 6.92 kg

REV	NAME & DATE	DESCRIPTION

UNLESS OTHERWISE SPECIFIED:
TOLERANCES: MACHINE + / - 0.25mm
FABRICATION + / - 1.0 mm

THIS DRG SUPPLIED BY
RODDY ENGINEERING
14 Waratah St, TUMUT NSW 2720
Ph: 02 6947 4039

DRAWING No. 11-2925-1
REV:

DRAWN N DE BRUYN 27/03/2024
DRAWING CHECKED
DESIGNED
DESIGN CHECKED
SCALE 1:2.5
WORK ORDER No
APPROVED
SECTION No/KKS
A3 SHEET SIZE

snowyhydro LIMITED

M2 POWER STATION UNIT 11
VALVE 2925-1 DOWN STREAM PIPE 1

SMA-DRG-NO

REV

SHEET 3 OF 7

0,0