ITEM	DRAWING No	DESCRIPTION	QTY.	MASS (kg)
1	OEM-80NB-VC	80NB VACULTIC COUPLING 316 S/S	1	5.48
2	11-2925-2	UNIT 11 VALVE 2925-2 DOWN STREAM PIPE 2	1	3.78
3	11-2925-1	UNIT 11 VALVE 2925-1 DOWN STREAM PIPE 1	1	6.92

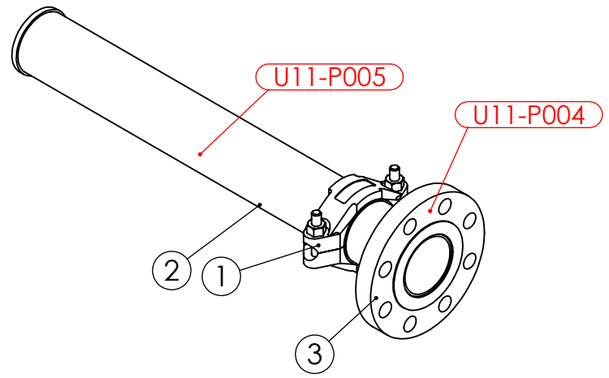

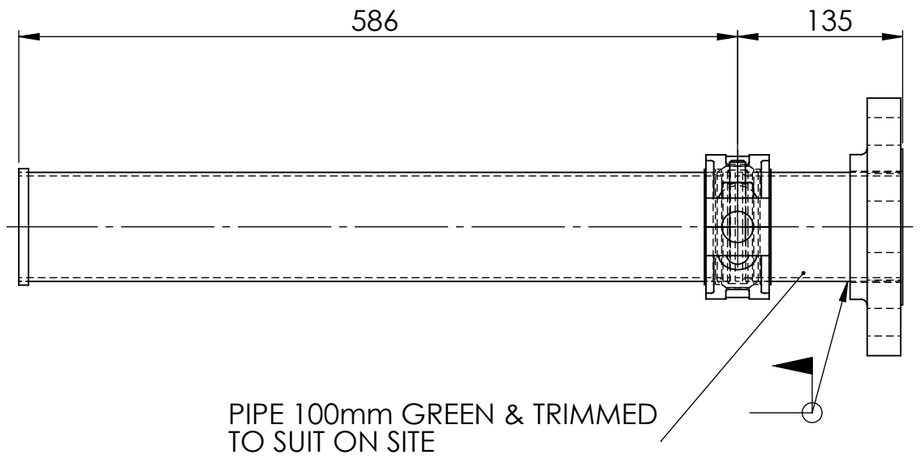

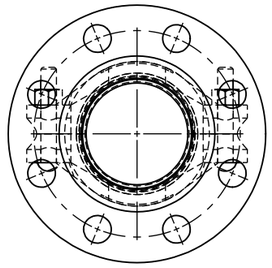

AS INSTALLED 14/3/25

UNIT 11 VALVE 2925 DOWN STREAM PIPE ASSEMBLY WEIGHT - 13.18 kg

REV	NAME & DATE	DESCRIPTION

UNLESS OTHERWISE SPECIFIED:
TOLERANCES: MACHINE + / - 0.25mm
FABRICATION + / - 1.0 mm

THIS DRG SUPPLIED BY
RODDY ENGINEERING
14 Waratah St, TUMUT NSW 2720
Ph: 02 6947 4039

DRAWING No. 11-2925
REV:

DRAWN N DE BRUYN 27/03/2024
DRAWING CHECKED
DESIGNED
DESIGN CHECKED
SCALE 1:5
APPROVED
WORK ORDER No
SECTION No/KKS
A3 SHEET SIZE

snowyhydro LIMITED

M2 POWER STATION UNIT11
VALVE 2925 DOWN STREAM PIPE ASSEMBLY

SMA-DRG-NO

REV

SHEET 2 OF 7

0,0