ITEM	DRAWING No	DESCRIPTION	QTY.	MASS (kg)
1	OEM-80NB-300-SF-316L	80NB - 300lb SLIP ON FLANGE 316L S/S	2	6.08
2	J003435-55A	80NB SHED 40 PIPE x 90 DEGREE BEND 375R	1	69.17
3	J003435-60	80NB SHED 40 OFFSET BEND VALVE 2931B PIPE 4	1	31.55

RED EYE QR CODE AREA

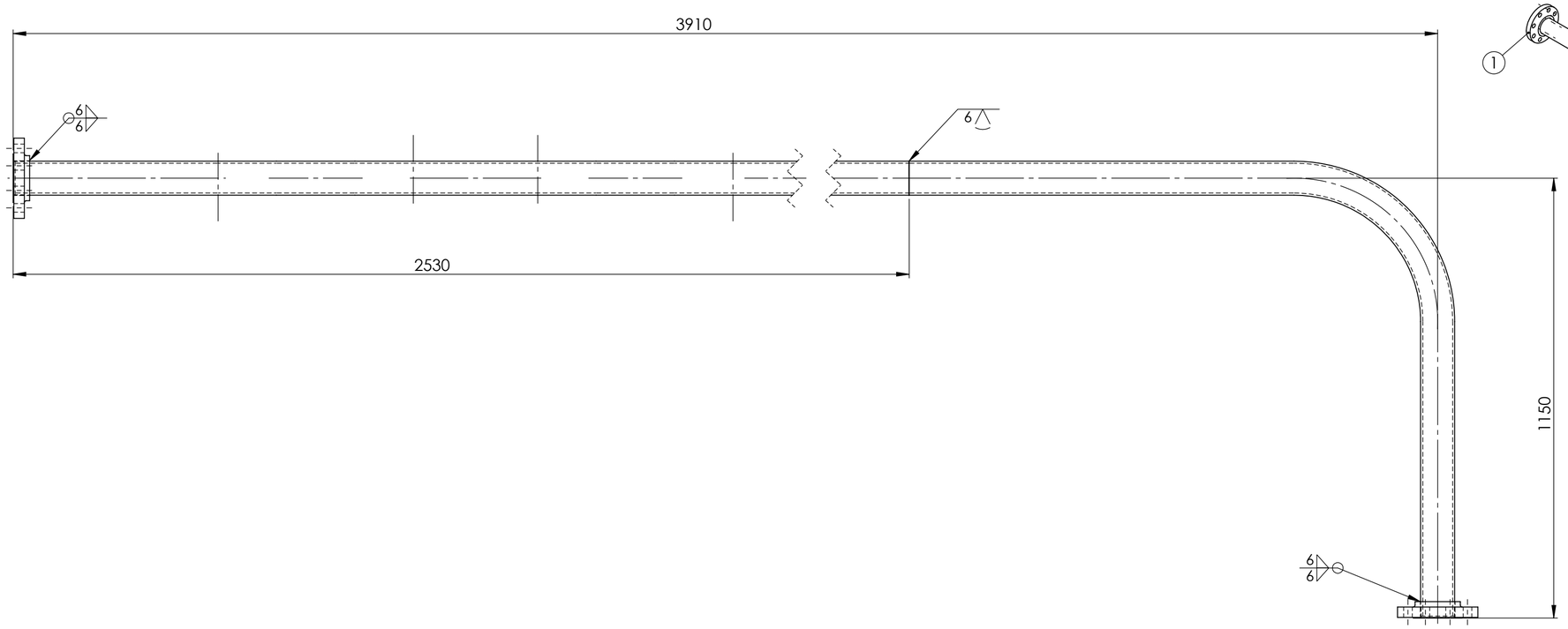

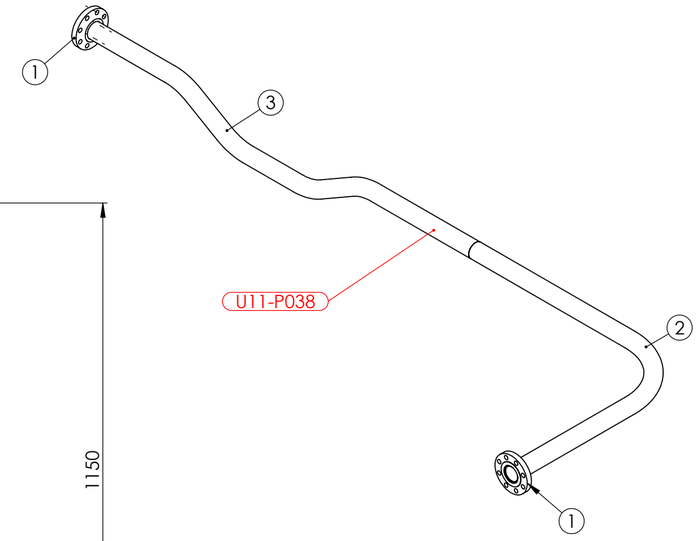

PIPE LABEL - U11-P038

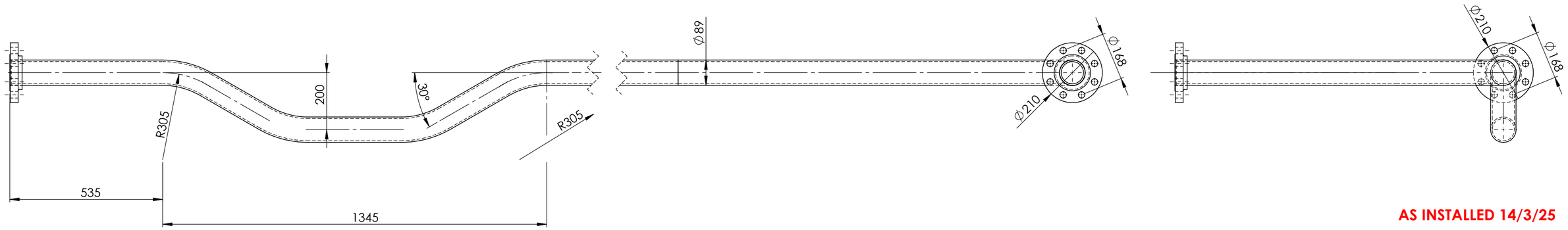

AS INSTALLED 14/3/25

PIPEWORK MANUFACTURED OF A JIG - FLANGES AS PER DRAWING
DIMENSIONS ARE APPROXIMATE

UNIT 11 VALVE 2931B DOWN STREAM PIPE 3 WEIGHT - 69.59 kg

REV	NAME & DATE	DESCRIPTION

UNLESS OTHERWISE SPECIFIED:
TOLERANCES: MACHINE + / - 0.25mm
FABRICATION + / - 1.0 mm

THIS DRG SUPPLIED BY
RODDY ENGINEERING
14 Waratah St, TUMUT NSW 2720
Ph: 02 6947 4039

DRAWING No. 11-2931B-3
REV:

DRAWN N DE BRUYN 25/03/2024
DRAWING CHECKED
DESIGNED
DESIGN CHECKED
SCALE 1:10
WORK ORDER No
APPROVED
SECTION No/KKS
A2 SHEET SIZE

snowyhydro LIMITED

M2 POWER STATION UNIT 11
VALVE 2931B DOWN STREAM PIPE 3

SMA-DRG-NO

REV

SHEET 1 OF 1