DIMENSIONS IN MILLIMETRES

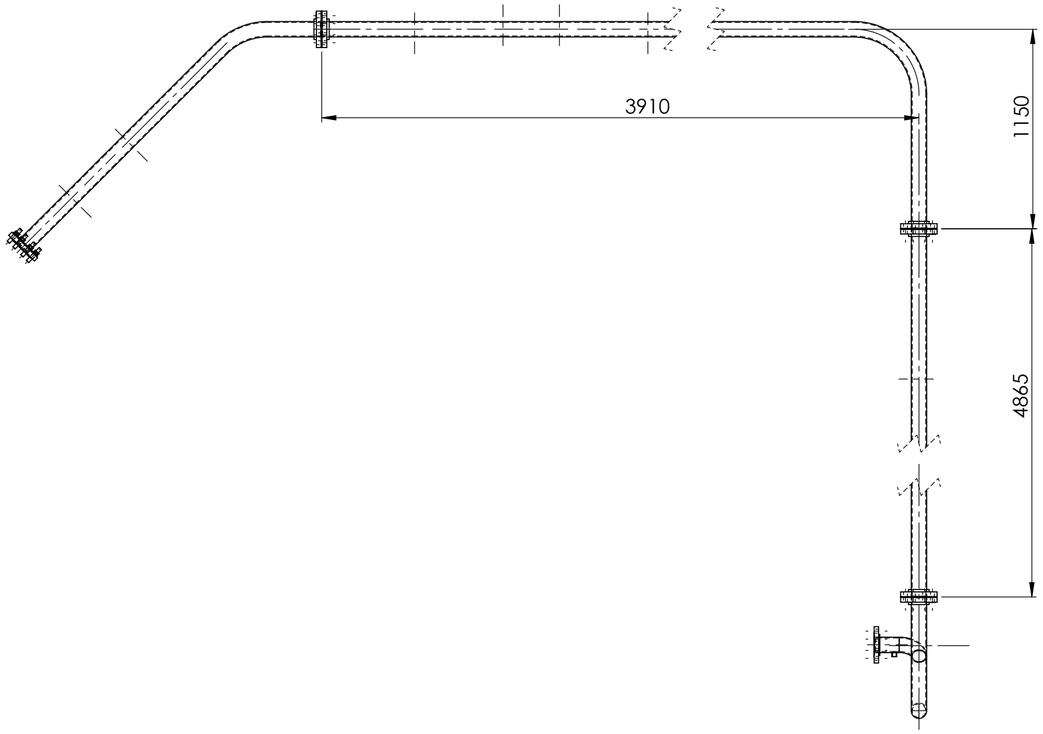

ITEM	DRAWING No	DESCRIPTION	QTY.	MASS (kg)
1	OEM-MY-3_4x28	3/4" DIA MYLAR INSULATION SLEEVE 28 LONG	8	0.00
2	OEM-80NB-JIS30K-3	80NB JIS30K 3.0mm C-4430 GASKET	1	0.1
3	OEM-80NB-300-15	80NB 300LB 1.5mm C-4400 GASKET	3	0
4	11-2931B-4	UNIT 11 VALVE 2931B DOWN STREAM PIPE 4	1	37.64
5	11-2931B-3	UNIT 11 VALVE 2931B DOWN STREAM PIPE 3	1	69.59
6	11-2931B-2	UNIT 11 VALVE 2931B DOWN STREAM PIPE 2	1	68.40
7	11-2931B-1	UNIT 11 VALVE 2931B DOWNSTREAM PIPE 1	1	66.53
8	3-4_UNC-AT-90	3/4" UNC ALL THREAD GRADE 8- 90 LONG	8	0.20
9		3/4" G10 EXPOY FLAT WASHER	8	
10		3/4" HIGH TENSILE FLAT WASHER	8	
11		3/4" UNC HEX NUT ZINC PLATED	8	0.1
12		M20 FLAT WASHER 304 S/S (37x22x2)	48	
13		M20x2.5 NUT 304 S/S	24	
14		M20x2.5 x 90 HEX BOLT 304 S/S	24	0.3

RED EYE QR CODE AREA

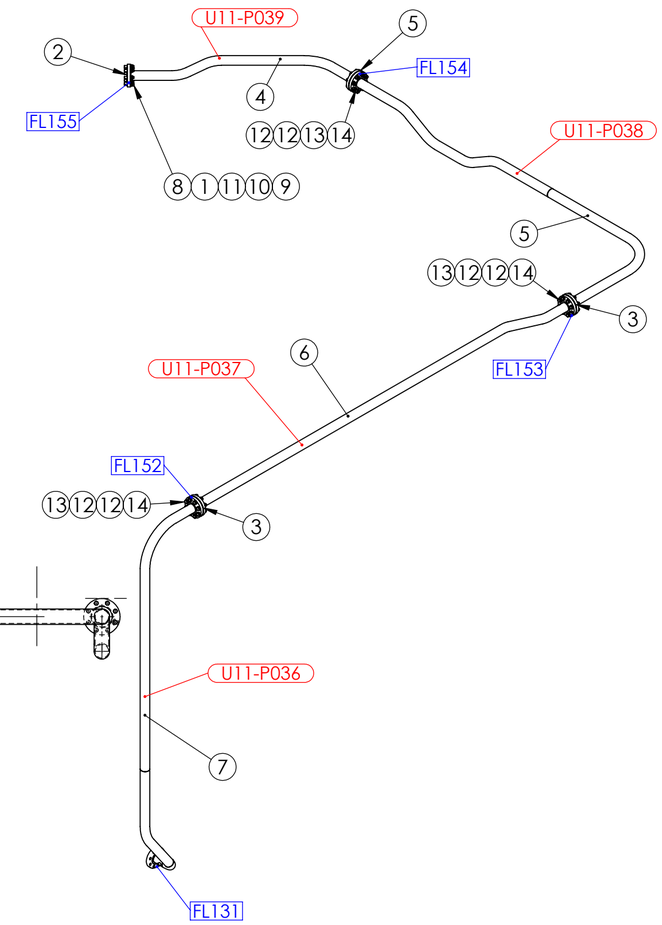

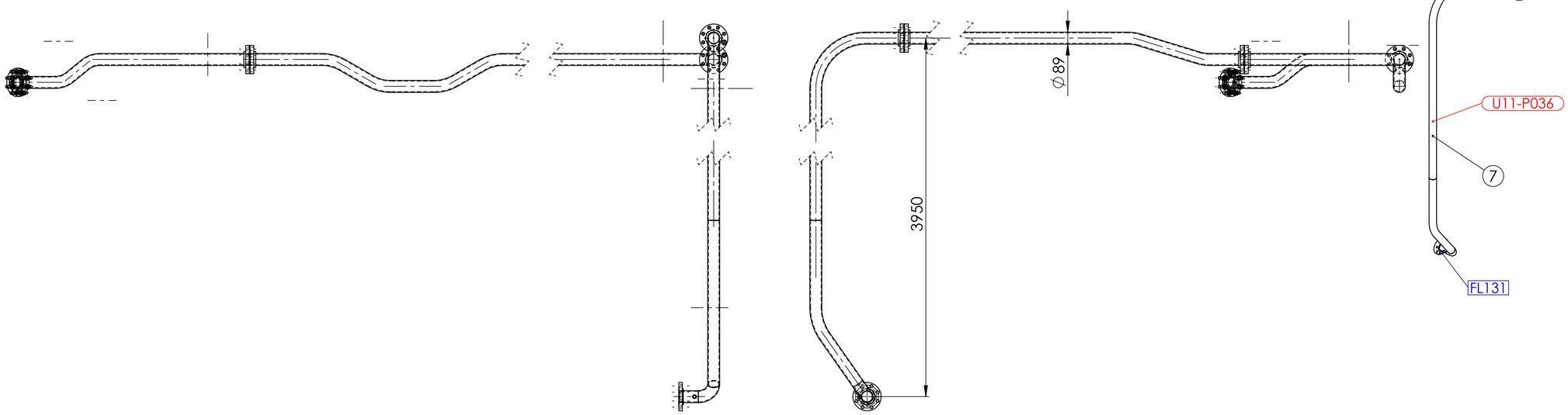

AS INSTALLED 14/3/25

UNIT 11 VALVE 2931B DOWNSTREAM PIPE ASSEMBLY WEIGHT - 245.11 kg

PIPEWORK MANUFACTURED OF A JIG - FLANGES AS PER DRAWING
DIMENSIONS ARE APPROXIMATE

REV	NAME & DATE	DESCRIPTION

UNLESS OTHERWISE SPECIFIED:
TOLERANCES: MACHINE + / - 0.25mm
FABRICATION + / - 1.0 mm

THIS DRG SUPPLIED BY
RODDY ENGINEERING
14 Waratah St, TUMUT NSW 2720
Ph: 02 6947 4039

DRAWING No. 11-2931B
REV:

DRAWN N DE BRUYN 25/03/2024
DRAWING CHECKED
DESIGNED
DESIGN CHECKED
SCALE 1:25
WORK ORDER No
APPROVED
SECTION No/KKS
A2 SHEET SIZE

snowyhydro LIMITED

M2 POWER STATION UNIT 11
VALVE 2931B DOWNSTREAM PIPE ASSEMBLY

SMA-DRG-NO

REV

SHEET 1 OF 1