ITEM	DRAWING No	DESCRIPTION	QTY.	MASS (kg)
1	J003435-72	100NB PLATE FLANGE JIS30K - 316L S/S	1	4
2	11-2933-1-1	100NB SHED 10 PIPE 316 SS VICTAULIC GROOVED	1	4.30

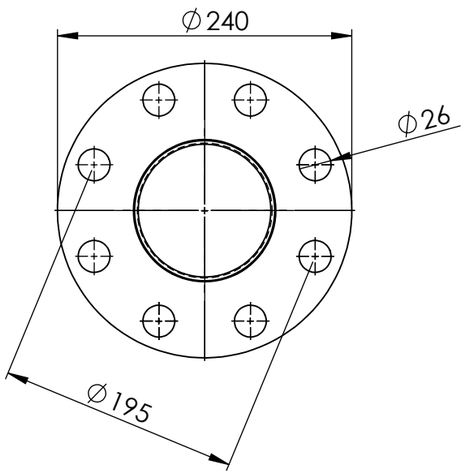

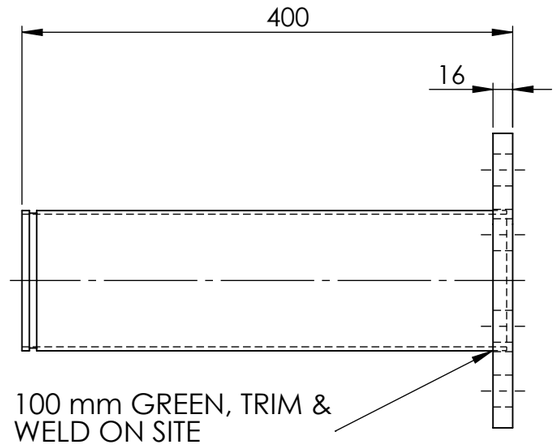

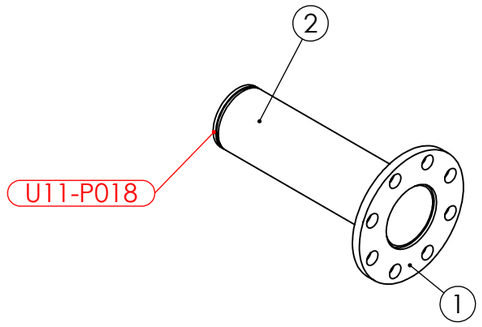

PIPE LABEL - U11-P018

AS INSTALLED 14/3/25

PIPEWORK MANUFACTURED OF A JIG - FLANGES AS PER DRAWING
DIMENSIONS ARE APPROXIMATE

UNIT 11 VALVE 2933-1 DOWN STREAM PIPE 1 WEIGHT - 7.28 kg

REV	NAME & DATE	DESCRIPTION

UNLESS OTHERWISE SPECIFIED:
TOLERANCES: MACHINE + / - 0.25mm
FABRICATION + / - 1.0 mm

THIS DRG SUPPLIED BY
RODDY ENGINEERING
14 Waratah St, TUMUT NSW 2720
Ph: 02 6947 4039

DRAWING No. 11-2933-1
REV:

DRAWN N DE BRUYN 27/03/2024
DRAWING CHECKED
DESIGNED
DESIGN CHECKED
SCALE 1:5
WORK ORDER No
APPROVED
SECTION No/KKS
A3 SHEET SIZE

snowyhydro LIMITED

M2 POWER STATION UNIT 11
VALVE 2933-1 DOWN STREAM PIPE 1

SMA-DRG-NO

REV

SHEET 1 OF 1

0,0