ITEM	DRAWING No	DESCRIPTION	QTY.	MASS (kg)
1	OEM-80NB-JIS10K-316L	80NB PLATE FLANGE JIS 10K - 316L S/S	1	3
2	OEM-80NB-150-SF-316L	80NB - 150 Lb SLIP ON FLANGE 316L S/S	1	4.10
3	OEM-80-LR-40-316L	80NB LONG RADIUS BEND SHED 40 316L S/S	1	2.06
4	12-2844-1-1	80NB SHED 40 PIPE 316 S/S	1	3.64

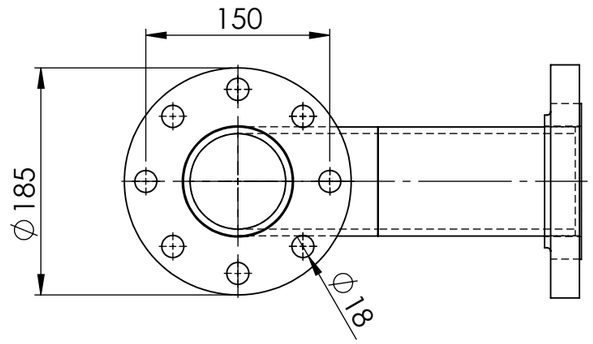

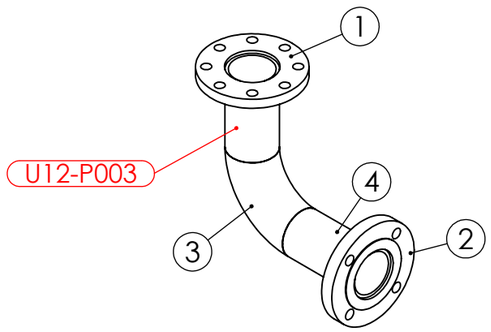

PIPE LABEL - U12-P003

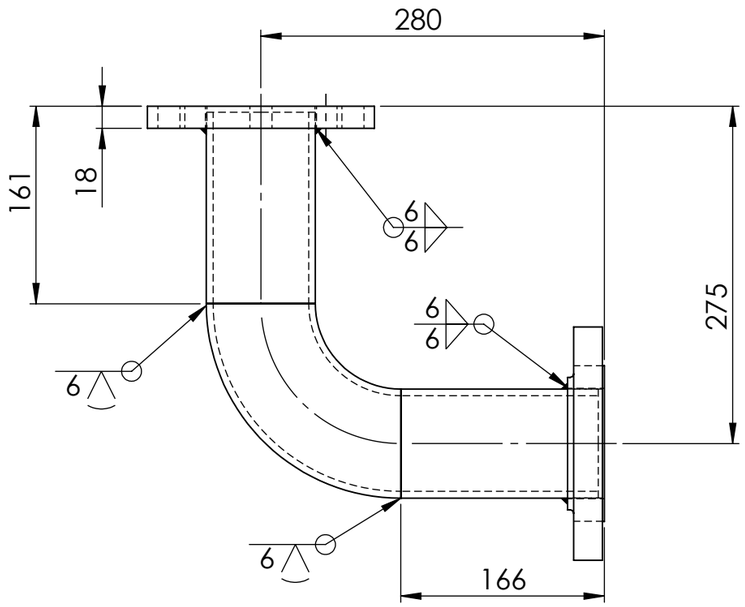

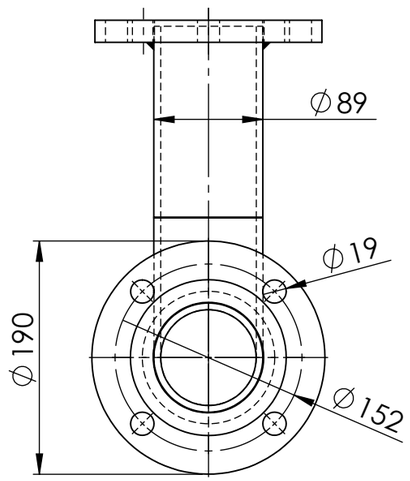

PIPEWORK MANUFACTURED OF A JIG - FLANGES AS PER DRAWING
DIMENSIONS ARE APPROXIMATE

AS INSTALLED 12/3/25

UNIT 12 VALVE 2844 DOWN STREAM PIPE WEIGHT - 12.46 kg

REV	NAME & DATE	DESCRIPTION

UNLESS OTHERWISE SPECIFIED:
TOLERANCES: MACHINE + / - 0.25mm
FABRICATION + / - 1.0 mm

THIS DRG SUPPLIED BY
RODDY ENGINEERING
14 Waratah St, TUMUT NSW 2720
Ph: 02 6947 4039

DRAWING No. 12-2844-1
REV:

DRAWN N DE BRUYN 17/04/2024
DRAWING CHECKED
DESIGNED
DESIGN CHECKED
SCALE 1:5
WORK ORDER No
APPROVED
SECTION No/KKS
A3 SHEET SIZE

snowyhydro LIMITED

M2 POWER STATION UNIT 12
VALVE 2844 DOWN STREAM PIPE

SMA-DRG-NO

REV

SHEET 1 OF 1

0,0