ITEM	DRAWING No	DESCRIPTION	QTY.	MASS (kg)
1	OEM-2902A-SHL	150NB NON RETURN VALVE	1	
2	OEM-2901A-SHL	VALVE 2901A	1	
3	OEM-150-300-15	150NB ANSI 300 Lb1.5mm C-4400 GASKET	4	
4	3-4_UNC-AT-105	3/4" UNC ALL THREAD GRADE 8- 105 LONG	12	0.23
5		3/4" G10 EXPOY FLAT WASHER	84	
6		3/4" DIA MYLAR INSULATION SLEEVE 45 LONG	12	0.00
7		3/4" DIA MYLAR INSULATION SLEEVE 85 LONG	36	0.00
8		3/4" HIGH TENSILE FLAT WASHER	84	
9		3/4" UNC HEX NUT ZINC PLATED	48	0.1
10		3/4"UNC 10 x 5" HEX BOLT ZP Gr 8	36	

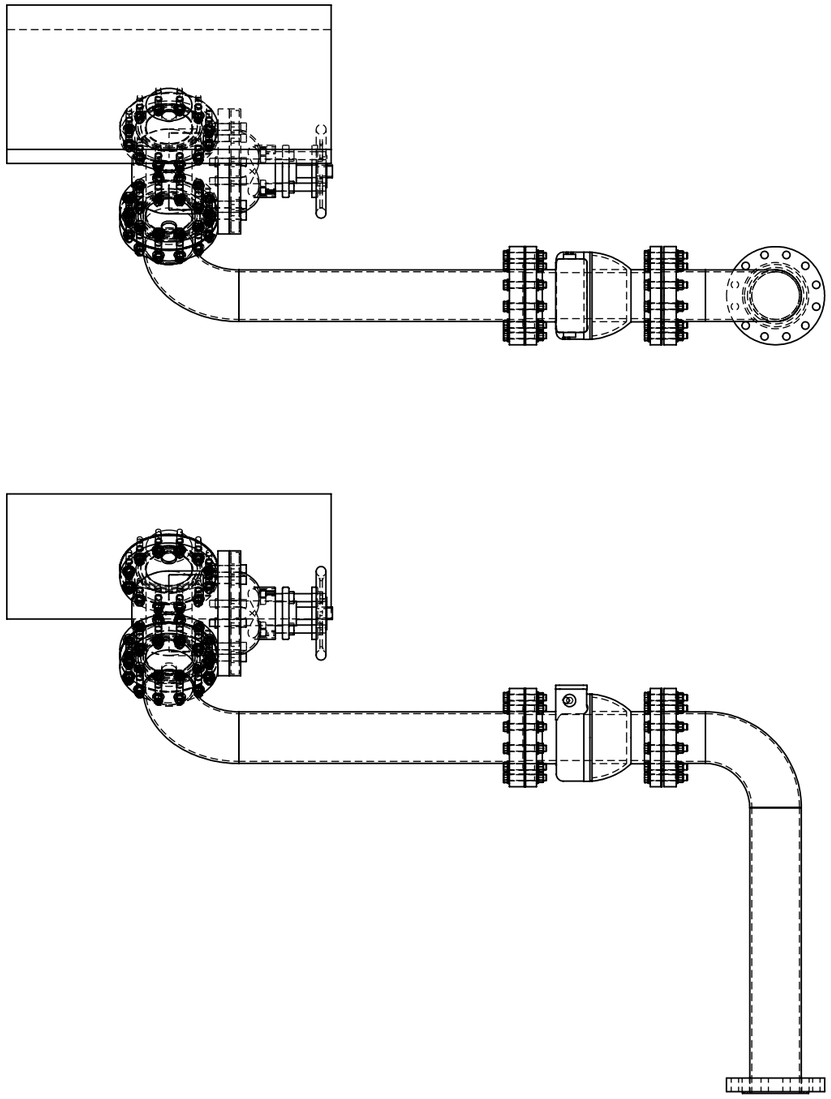

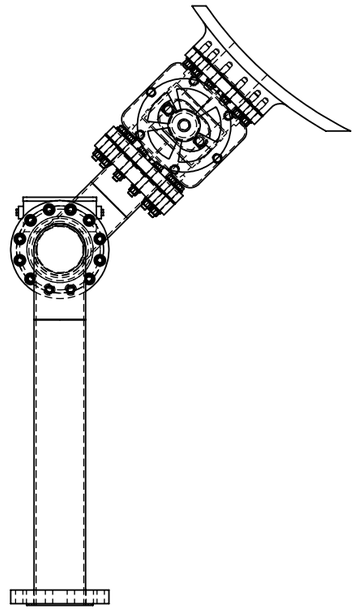

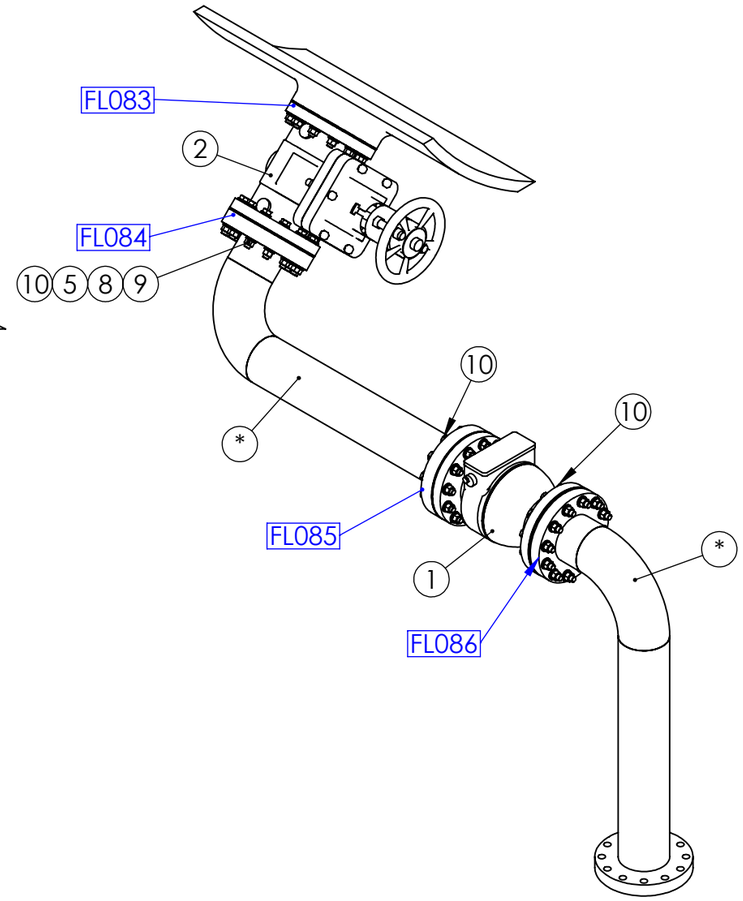

VALVES 2901A & 2902A ASSEMBLY WEIGHT - 365.93 kg

REV	NAME & DATE	DESCRIPTION	DATE	APPROVED
		REVISIONS		

UNLESS OTHERWISE SPECIFIED:
TOLERANCES: MACHINE + / - 0.25mm
FABRICATION + / - 1.0 mm

THIS DRG SUPPLIED BY
RODDY ENGINEERING
14 Waratah St, TUMUT NSW 2720
Ph: 02 6947 4039

DRAWING No. 12-2901A-2902A
REV:

DRAWN N DE BRUYN 19/12/2024
DRAWING CHECKED
DESIGNED
DESIGN CHECKED
SCALE 1:20
WORK ORDER No
APPROVED
SECTION No/KKS
A3 SHEET SIZE

snowyhydro LIMITED

M2 POWER STATION
UNIT 12
VALVES 2902A & 2902A ASSEMBLY

SMA-DRG-NO

REV

SHEET 1 OF 1

0,0