DIMENSIONS IN MILLIMETRES

ITEM	DRAWING No	DESCRIPTION	QTY.	MASS (kg)
1	OEM-40-300-SO-316L	40NB FLANGE ANSI 300 LB SLIP ON 316L S/S	2	3
2	OEM-40-SR-40-316L	40NB SHORT RADIUS BEND 316L S/S SHED 40	2	0.25
3	OEM-40-LR-40-316L	40NB LONG RADIUS BEND 316L S/S SHED 40	1	0.37
4	J003435-65	40NB SHED 40 PIPE VALVE 2904 PIPE 1A	1	5.07
5	J003435-64	40NB SHED 40 PIPE VALVE 2904 PIPE 1B	1	12.02
6	12-2904-1-1	40NB SHED 40 PIPE 316L S/S	1	1.00

RED EYE QR CODE AREA

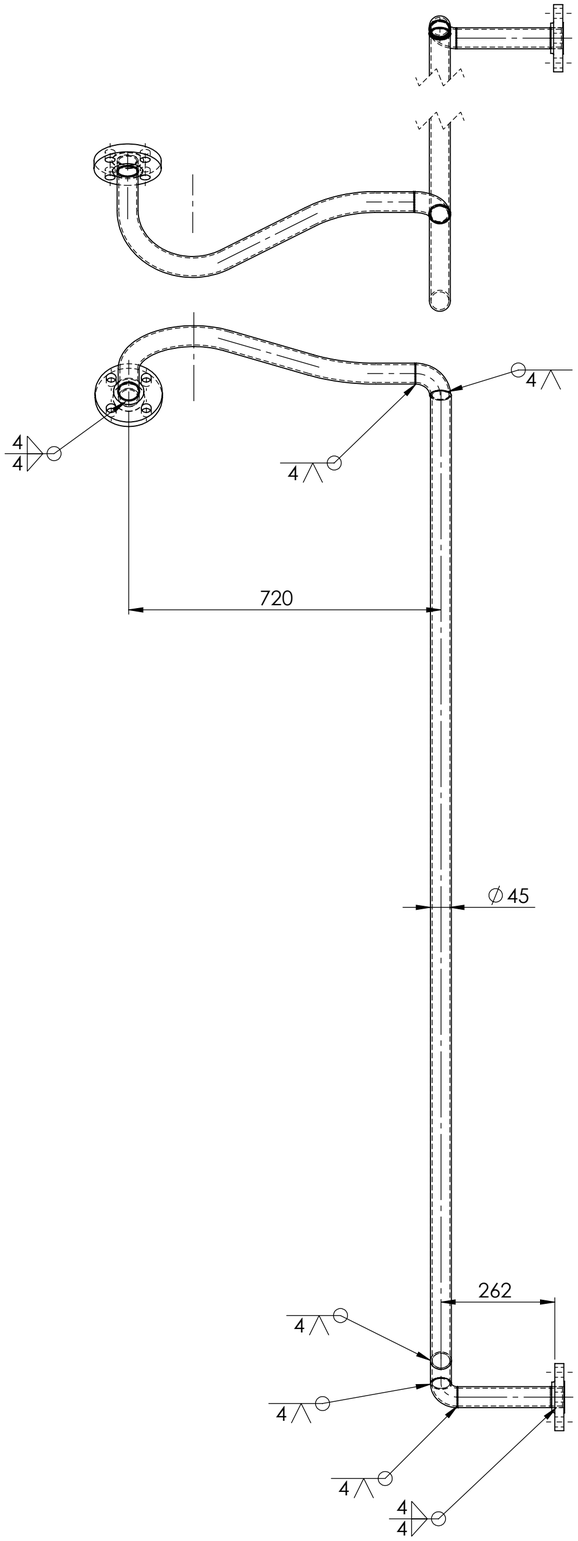

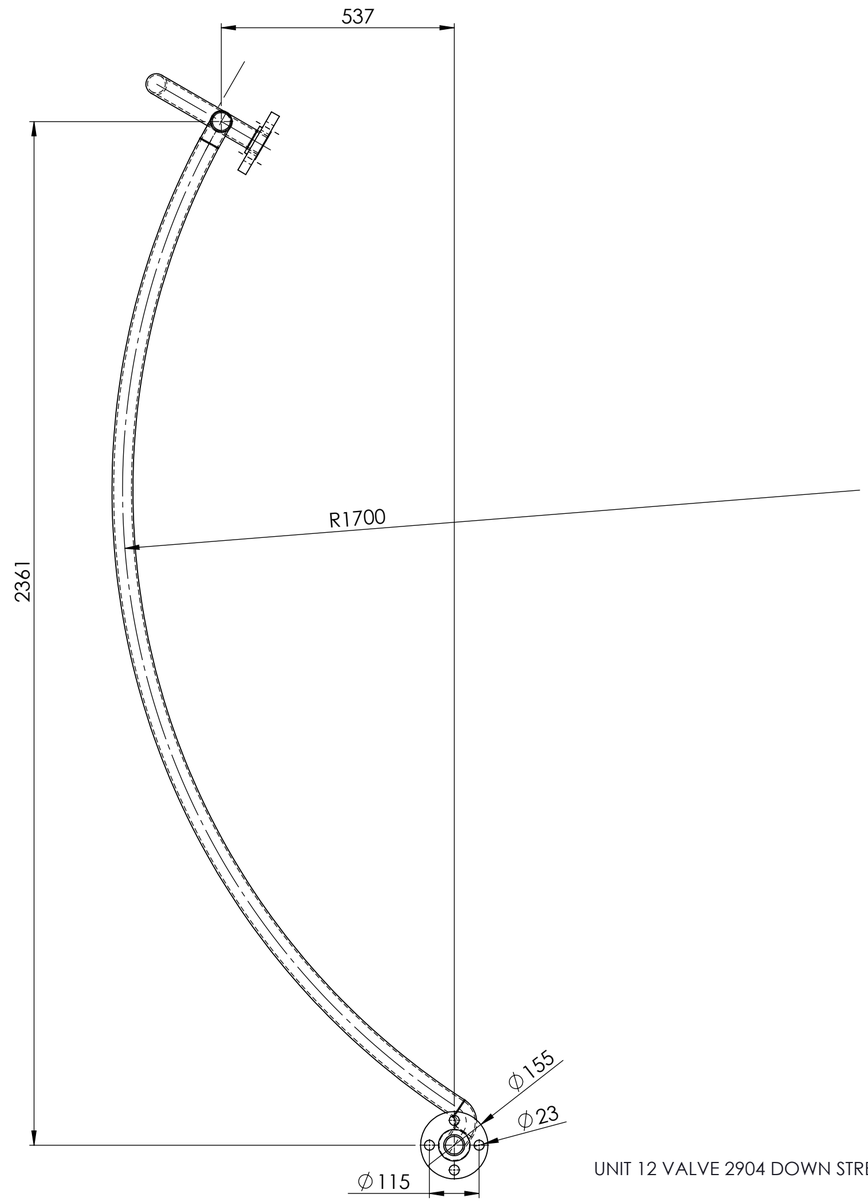

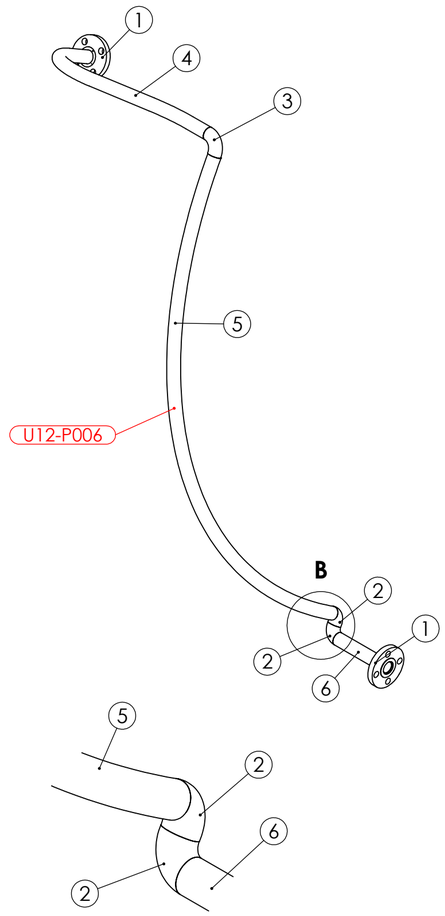

DETAIL B
SCALE 1 : 5

PIPE LABEL - U12-P006

PIPEWORK IS MANUFACTURED OF A JIG -
FLANGES AS PER DRAWING
DIMENSIONS ARE APPROXIMATE

AS INSTALLED 7/3/25

UNIT 12 VALVE 2904 DOWN STREAM PIPE 1 WEIGHT - 21.54 kg

REV	NAME & DATE	DESCRIPTION

UNLESS OTHERWISE SPECIFIED:
TOLERANCES: MACHINE + / - 0.25mm
FABRICATION + / - 1.0 mm

THIS DRG SUPPLIED BY
RODDY ENGINEERING
14 Waratah St, TUMUT NSW 2720
Ph: 02 6947 4039

DRAWING No. 12-2904-1
REV:

DRAWN N DE BRUYN 19/04/2024
DRAWING CHECKED
DESIGNED
DESIGN CHECKED
SCALE 1:10
WORK ORDER No
APPROVED
SECTION No/KKS
A2 SHEET SIZE

snowyhydro LIMITED

M2 POWER STAION UNIT 12
VALVLE 2904 DOWN STREAM PIPE 1

SMA-DRG-NO

REV

SHEET 1 OF 1