| ITEM | DRAWING No | DESCRIPTION | QTY. | MASS (kg) |
|---|---|---|---|---|
| 1 | OEM-80NBx40-T-40-316L | 80NB x 40NB BUTT WELD REDUCING TEE 316L S/S | 1 | 2.31 |
| 2 | OEM-80NB-JIS30K-A-316L | 80NB PLATE FLANGE JIS 30 K 316L S/S | 1 | 5.32 |
| 3 | OEM-80NB-300-SF-316L | 80NB - 300lb SLIP ON FLANGE 316L S/S | 1 | 6.08 |
| 4 | OEM-40-300-SO-316L | 40NB FLANGE ANSI 300 LB SLIP ON 316L S/S | 1 | 3 |
| 5 | 11-2904-3-1 | 40NB SHED 40 PIPE 316L S/S | 1 | 0.47 |

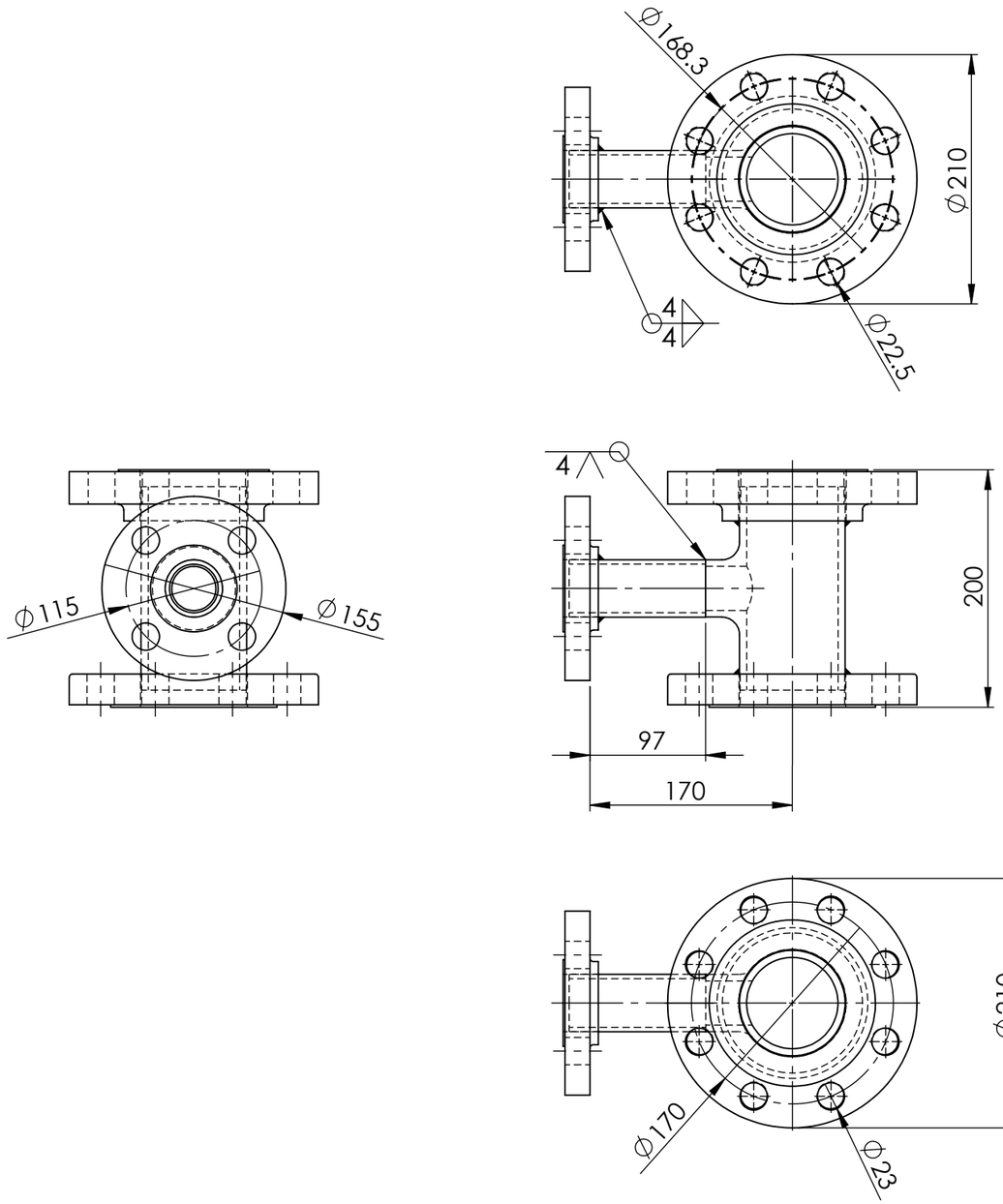


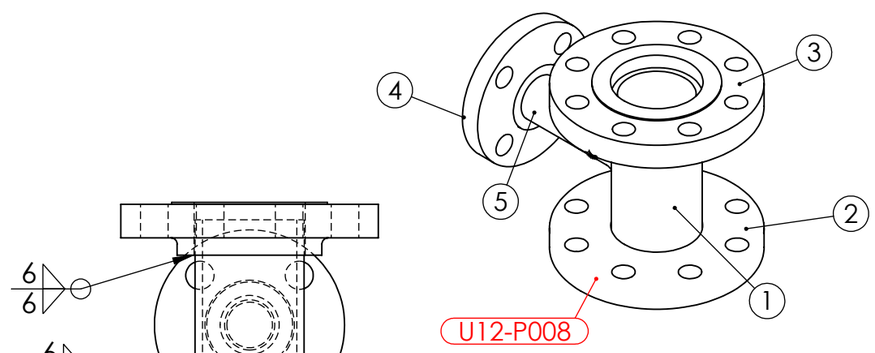


**PIPE LABEL - U12-P008**

**PIPEWORK MANUFACTURED OF A JIG**
**- FLANGES AS PER DRAWING**
**DIMENSIONS ARE APPROXIMATE**

**AS INSTALLED 7/3/25**

UNIT 12 VALVE 2904 DOWN STREAM PIPE 3 WEIGHT - 16.91 kg

| REV | NAME & DATE | DESCRIPTION |
|---|---|---|

UNLESS OTHERWISE SPECIFIED:
TOLERANCES: MACHINE + / - 0.25mm
FABRICATION + / - 1.0 mm

THIS DRG SUPPLIED BY
RODDY ENGINEERING
14 Waratah St, TUMUT NSW 2720
Ph: 02 6947 4039

DRAWING No. 12-2904-3
REV:

DRAWN N DE BRUYN 19/04/2024
DRAWING CHECKED
DESIGNED
DESIGN CHECKED
SCALE 1:5
WORK ORDER No
APPROVED
SECTION No/KKS
A3 SHEET SIZE

snowyhydro LIMITED

M2 POWER STATION UNIT 12
VALVE 2904 DOWN STREAM PIPE 3

**SMA-DRG-NO**

REV

SHEET 1 OF 1

0,0