594,420

DIMENSIONS IN MILLIMETRES

ITEM	DRAWING No	DESCRIPTION	QTY.	MASS (kg)
1	OEM-50NB-JIS30K-P-M-316L	50NB PLATE FLANGE JIS 30 K 316L S/S MACHINED ORING GROOVE	1	2.63
2	OEM-50NB-300-SO-316L	50NB ANSI Lb 300 SLIP ON FLANGE 316L S/S	1	2.98
3	OEM-1_2-BSPP-3000-316L	1/2 BSPP 3000 Lb HALF COUPLING 316L S/S	1	0.06
4	J003435-62	50NB SHED 40 PIPE BENT VALVE 2905 PIPE 2	1	12.61

RED EYE QR CODE AREA

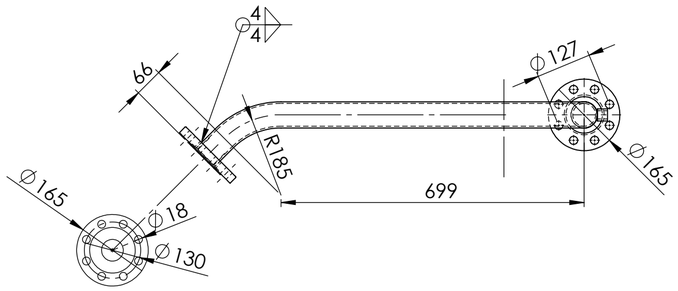

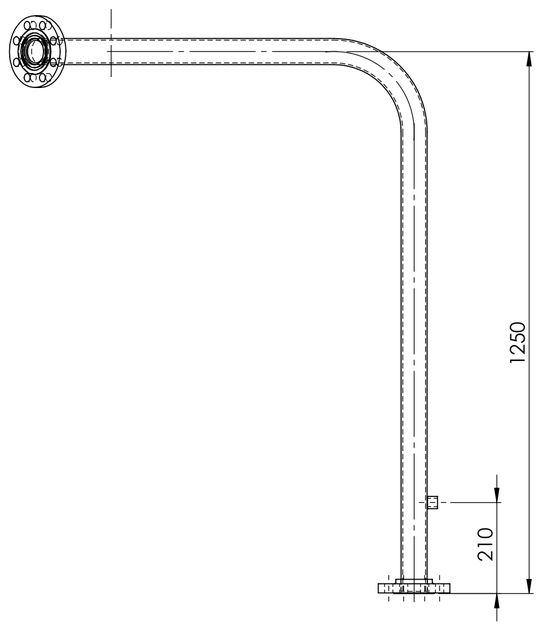

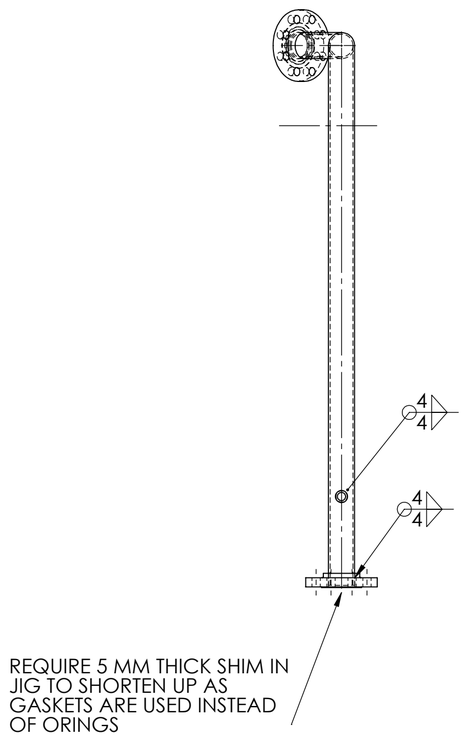

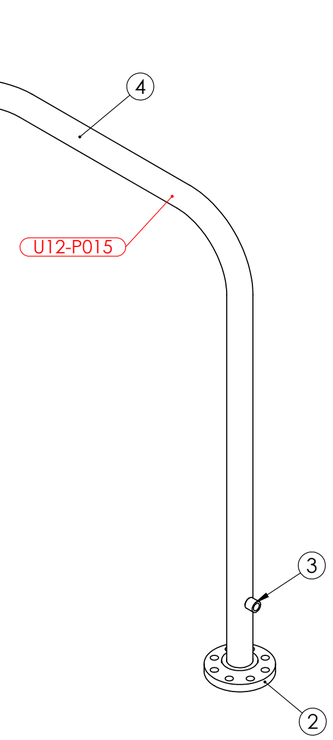

PIPE LABEL - U12-P015

PIPEWORK MANUFACTURED OF A JIG - FLANGES AS PER DRAWING DIMENSIONS ARE APPROXIMATE

AS INSTALLED 14/3/25

UNIT 12 VALVE 2905 DOWN STREAM PIPE 2 WEIGHT - 17.11 kg

REV	NAME & DATE	DESCRIPTION

UNLESS OTHERWISE SPECIFIED:
TOLERANCES: MACHINE + / - 0.25mm
FABRICATION + / - 1.0 mm

THIS DRG SUPPLIED BY
RODDY ENGINEERING
14 Waratah St, TUMUT NSW 2720
Ph: 02 6947 4039

DRAWING No. 12-2905-2 REV:

DRAWN N DE BRUYN 17/04/2024
DRAWING CHECKED
DESIGNED
DESIGN CHECKED
SCALE 1:10
WORK ORDER No
APPROVED
SECTION No/KKS
A2 SHEET SIZE

snowyhydro LIMITED

M2 POWER STATION UNIT 12
VALVE 2905 DOWN STREAM PIPE 2

SMA-DRG-NO

REV

SHEET 1 OF 1

0,0