| ITEM | DRAWING No | DESCRIPTION | QTY. | MASS (kg) |
|---|---|---|---|---|
| 1 | OEM-100NB-JIS30K-C-M-316L | 100NB FLANGE JIS 30 K TYPE C 316L S/S MACHINED | 2 | 8.10 |
| 2 | OEM-100-LR-40-316L | 100NB LONG RADIUS BEND 316L S/S SHED 40 | 1 | 3.9 |
| 3 | OEM-1_2-BSPP-3000-316L | 1/2 BSPP 3000 Lb HALF COUPLING 316L S/S | 1 | 0.06 |
| 4 | 12-2914-1-1 | 100NB SHED 40 PIPE 316L S/S | 1 | 2.73 |

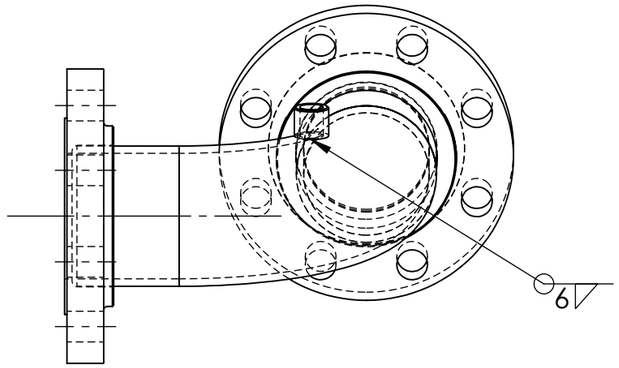


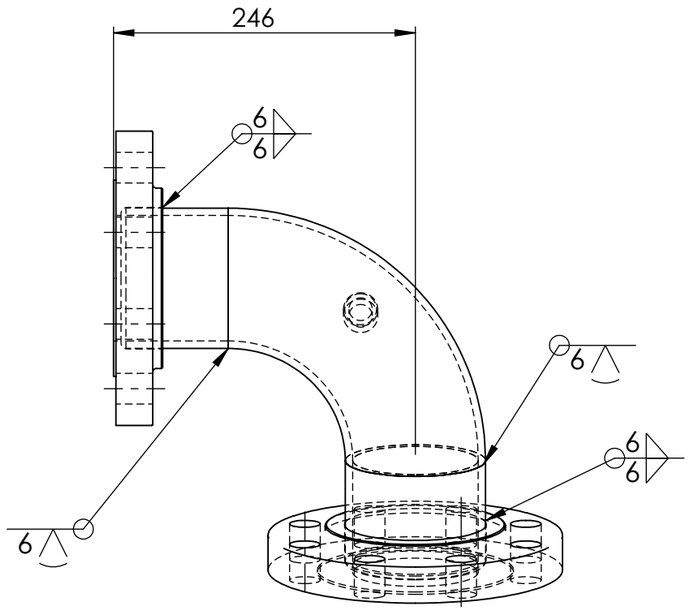


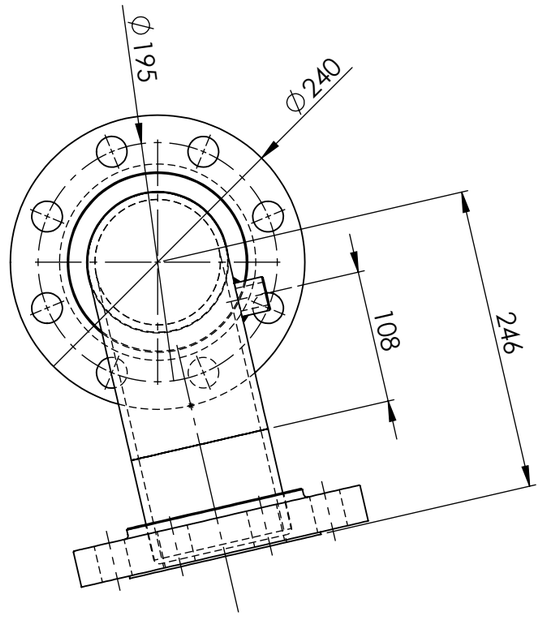


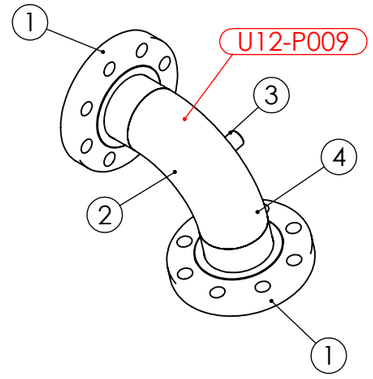


**PIPE LABEL - U12-P009**

**PIPEWORK MANUFACTURED OF A JIG - FLANGES AS PER DRAWING**
**DIMENSIONS ARE APPROXIMATE**

**AS INSTALLED 14/3/25**

UNIT 12 VALVE 2914 DOWN STREAM PIPE 1 WEIGHT - 22.92 kg

| REV | NAME & DATE | DESCRIPTION | DESCRIPTION | DATE | APPROVED |
|---|---|---|---|---|---|
| | | REVISIONS | | | |

UNLESS OTHERWISE SPECIFIED:
TOLERANCES: MACHINE + / - 0.25mm
FABRICATION + / - 1.0 mm

THIS DRG SUPPLIED BY
RODDY ENGINEERING
14 Waratah St, TUMUT NSW 2720
Ph: 02 6947 4039

DRAWING No. 12-2914-1
REV:

DRAWN N DE BRUYN 17/04/2024
DRAWING CHECKED
DESIGNED
DESIGN CHECKED
SCALE 1:5
WORK ORDER No
APPROVED
SECTION No/KKS
A3 SHEET SIZE

snowyhydro LIMITED

M2 POWER STATION UNIT 12
VALVE 2914 DOWN STREAM PIPE 1

**SMA-DRG-NO**

REV

SHEET 1 OF 1

0,0