ITEM	DRAWING No	DESCRIPTION	QTY.	MASS (kg)
1	OEM-100NB-PN25-SO-316L	100NB FLANGE PN25 SLIP ON 316L S/S	1	5.99
2	OEM-100NB-JIS30K-C-O-316L	100NB FLANGE JIS 30 K TYPE C 316L S/S MACHINED ORING GROOVE	1	7.95
3	OEM-100-LR-40-316L	100NB LONG RADIUS BEND 316L S/S SHED 40	1	3.9
4	J003435-53	100NB SHED 40 PIPE x 135 DEGREE BEND 356R	1	20.70
5	J003435-51	100NB SHED 40 PIPE x 90 DEGREE BEND 356R	1	98.30
6	12-2919-1-1	100NB SHED 40 PIPE 316 S/S	1	2.01

RED EYE QR CODE AREA

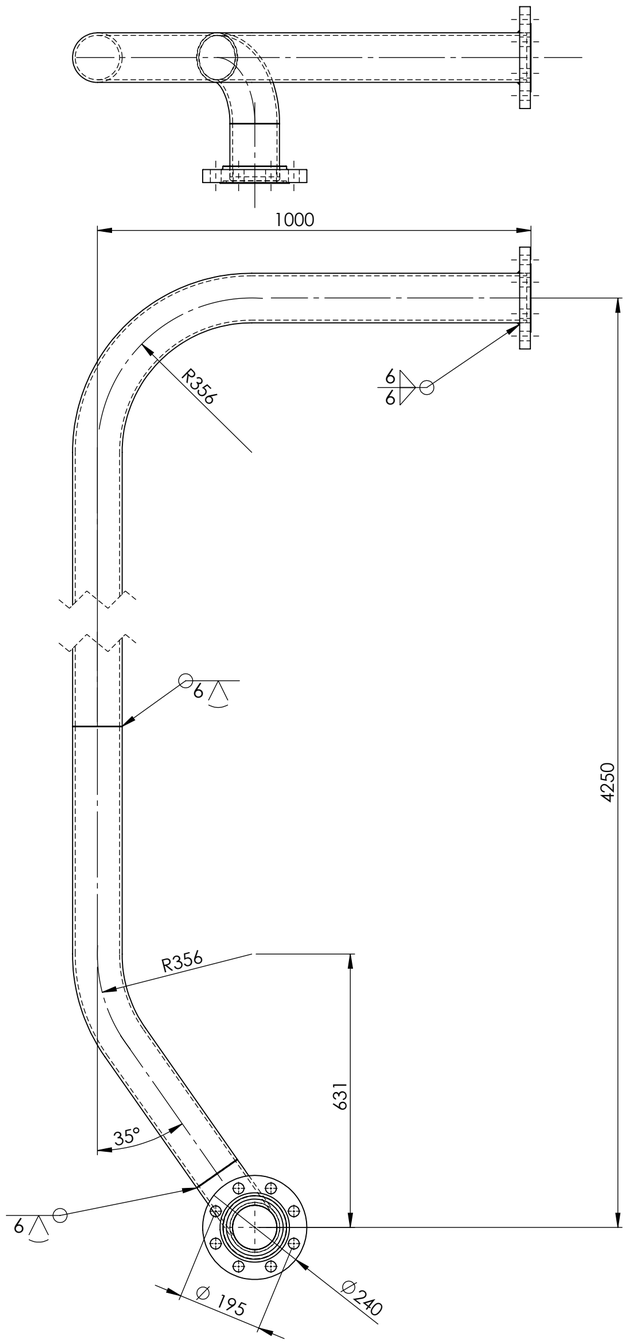

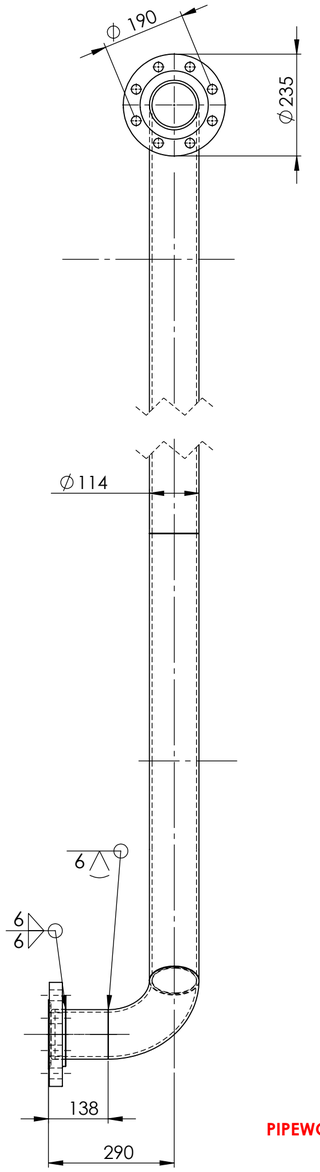

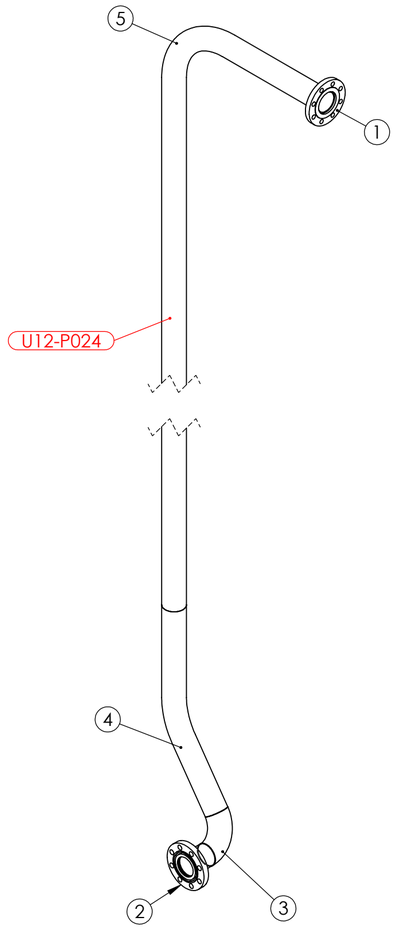

PIPE LABEL - U12-P024

PIPEWORK MANUFACTURED OF A JIG - FLANGES AS PER DRAWING
DIMENSIONS ARE APPROXIMATE

AS INSTALLED 14/3/25

UNIT 12 VALVE 2921 DOWN STREAM PIPE 1 WEIGHT - 102.26 kg

REV	NAME & DATE	DESCRIPTION

UNLESS OTHERWISE SPECIFIED:
TOLERANCES: MACHINE + / - 0.25mm
FABRICATION + / - 1.0 mm

THIS DRG SUPPLIED BY
RODDY ENGINEERING
14 Waratah St, TUMUT NSW 2720
Ph: 02 6947 4039

DRAWING No. 12-2919-1
REV:

DRAWN N DE BRUYN 18/04/2024
DRAWING CHECKED
DESIGNED
DESIGN CHECKED
SCALE 1:10
WORK ORDER No
APPROVED
SECTION No/KKS
A2 SHEET SIZE

snowyhydro LIMITED

M2 POWER STATION UNIT 12
VALVE 2919 DOWNSTREAM PIPE 1

SMA-DRG-NO

REV

SHEET 1 OF 1