ITEM	DRAWING No	DESCRIPTION	QTY.	MASS (kg)
1	OEM-100NB-PN25-SO-316L	100NB FLANGE PN25 SLIP ON 316L S/S	2	5.99
2	J003435-51	100NB SHED 40 PIPE x 90 DEGREE BEND 356R	1	98.30

RED EYE QR CODE AREA

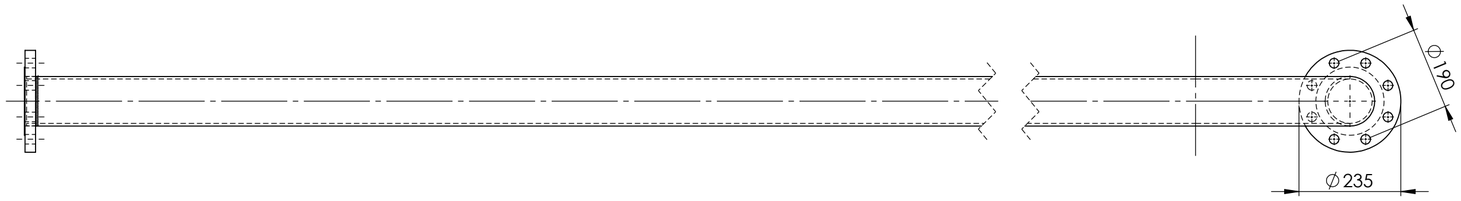

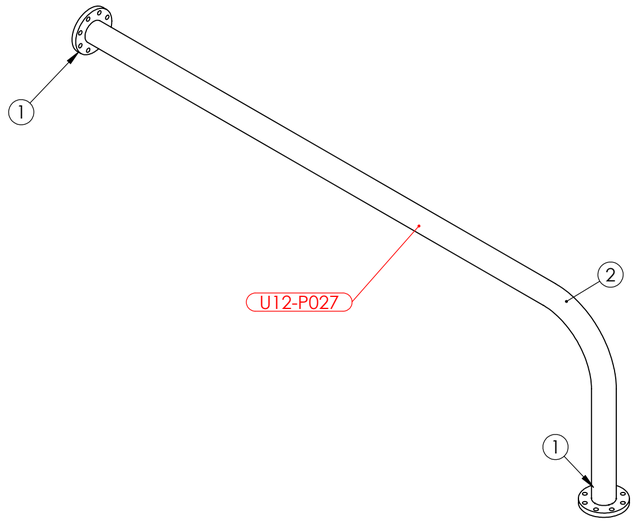

PIPE LABEL - U12-P027

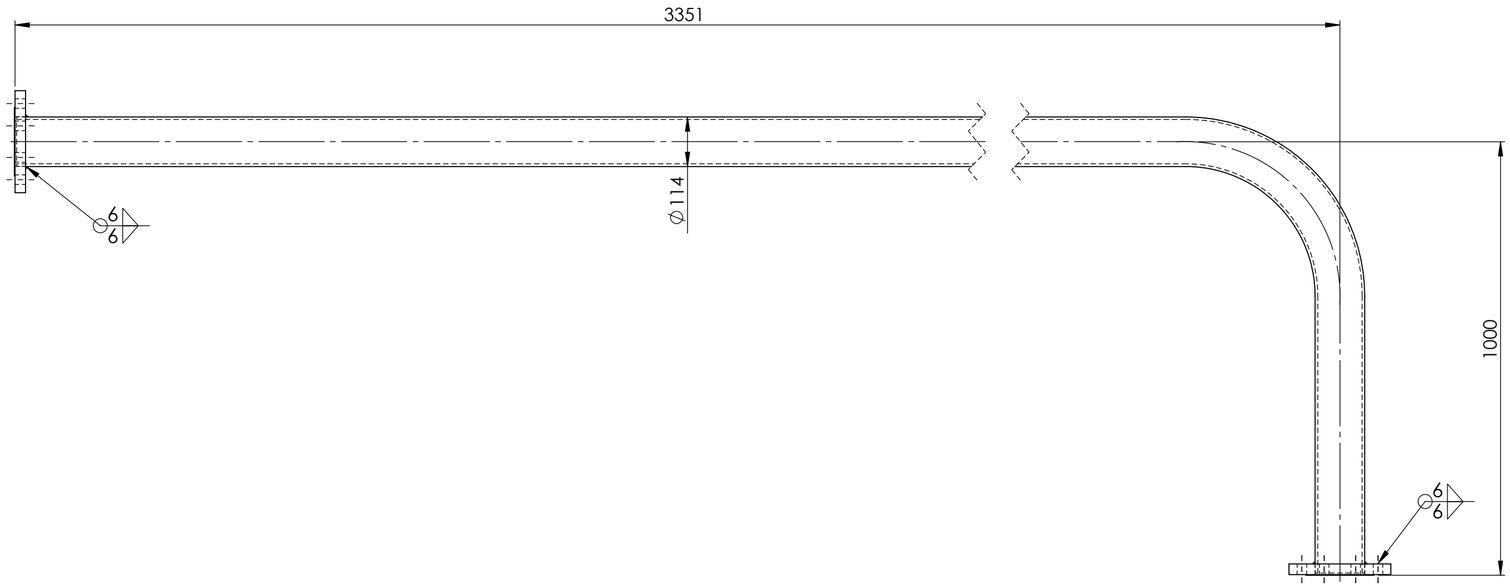

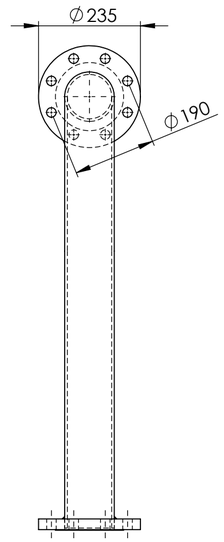

PIPEWORK MANUFACTURED OF A JIG - FLANGES AS PER DRAWING
DIMENSIONS ARE APPROXIMATE

AS INSTALLED 14/3/25

UNIT 12 VALVE 2919 DOWN STREAM PIPE 4 WEIGHT - 80.41 kg

REV	NAME & DATE	DESCRIPTION

UNLESS OTHERWISE SPECIFIED:
TOLERANCES: MACHINE + / - 0.25mm
FABRICATION + / - 1.0 mm

THIS DRG SUPPLIED BY
RODDY ENGINEERING
14 Waratah St, TUMUT NSW 2720
Ph: 02 6947 4039

DRAWING No. 12-2919-4
REV:

DRAWN N DE BRUYN 18/04/2024
DRAWING CHECKED
DESIGNED
DESIGN CHECKED
SCALE 1:20
WORK ORDER No
APPROVED
SECTION No/KKS
A2 SHEET SIZE

snowyhydro LIMITED

M2 POWER STATION UNIT 12
VALVE 2919 DOWN STREAM PIPE 4

SMA-DRG-NO

REV

SHEET 1 OF 1