ITEM	DRAWING No	DESCRIPTION	QTY.	MASS (kg)
1	OEM-80NB-JIS30K-C-O-316L	80NB FLANGE JIS 30 K TYPE C 316L S/S MACHINED ORING GROOVE	1	5.62
2	OEM-80NB-300-SF-316L	80NB - 300lb SLIP ON FLANGE 316L S/S	1	6.08
3	OEM-80-LR-40-316L	80NB LONG RADIUS BEND SHED 40 316L S/S	1	2.06
4	12-2919-7-1	80NB SHED 40 PIPE 316 S/S	1	4.67

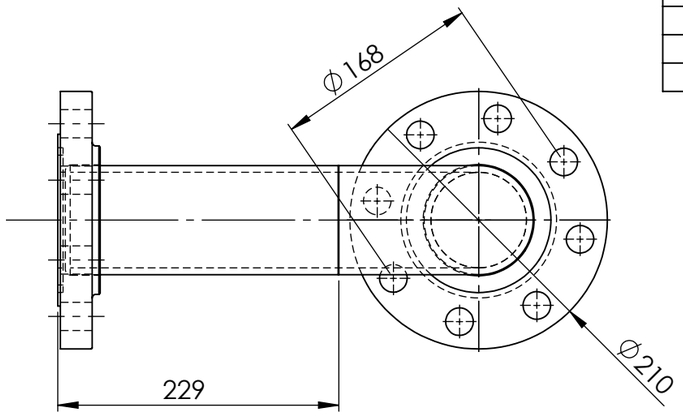

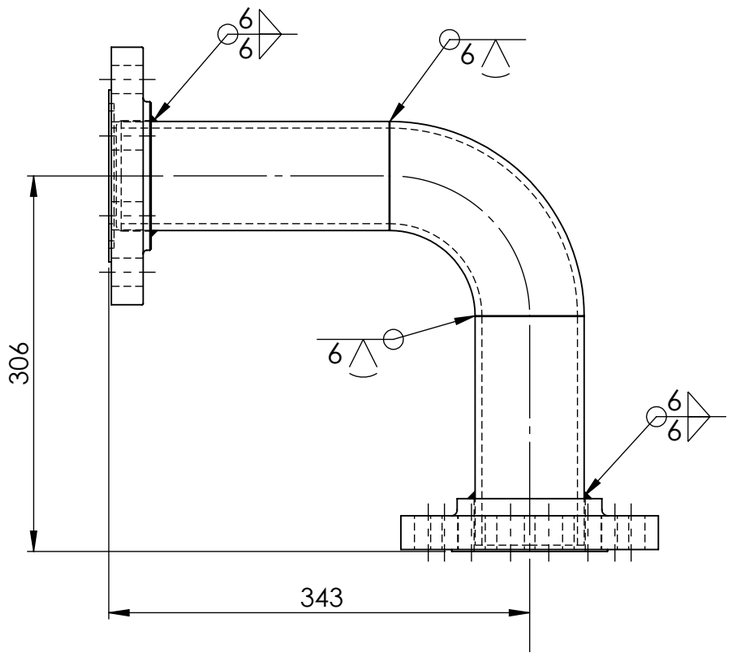

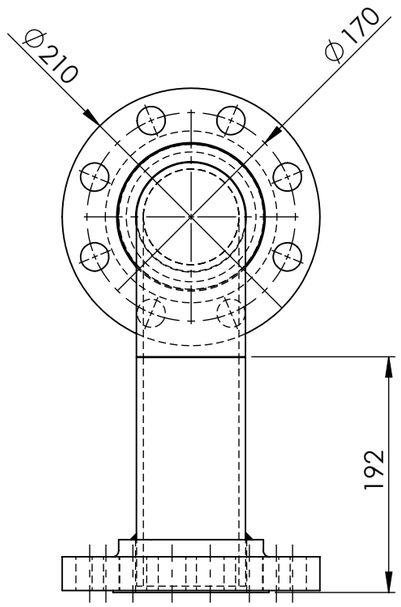

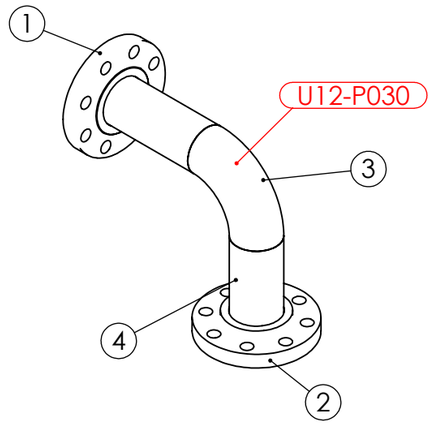

PIPE LABEL - U12-P030

PIPEWORK MANUFACTURED OF A JIG - FLANGES AS PER DRAWING
DIMENSIONS ARE APPROXIMATE

AS INSTALLED 14/3/25

UNIT 12 VALVE 2919 DOWN STREAM PIPE 7 WEIGHT - 18.43 kg

REV	NAME & DATE	DESCRIPTION

UNLESS OTHERWISE SPECIFIED:
TOLERANCES: MACHINE + / - 0.25mm
FABRICATION + / - 1.0 mm

THIS DRG SUPPLIED BY
RODDY ENGINEERING
14 Waratah St, TUMUT NSW 2720
Ph: 02 6947 4039

DRAWING No. 12-2919-7
REV:

DRAWN N DE BRUYN 18/04/2024
DRAWING CHECKED
DESIGNED
DESIGN CHECKED
SCALE 1:5
APPROVED
WORK ORDER No
SECTION No/KKS
A3 SHEET SIZE

snowyhydro LIMITED

M2 POWER STATION UNIT 12
VALVE 2919 DOWN STREAM PIPE 7

SMA-DRG-NO

REV

SHEET 1 OF 1

0,0