420, 297

ITEM	DRAWING No	DESCRIPTION	QTY.	MASS (kg)
1	OEM-100NB-300-SO-316L	100NB - 300lb SLIP ON FLANGE 316L S/S	1	9.53
2	OEM-100NB-PN25-SO-316L	100NB FLANGE PN25 SLIP ON 316L S/S	1	5.99
3	J003435-52	100NB SHED 40 PIPE VALVE 2921 PIPE 1	1	70.30

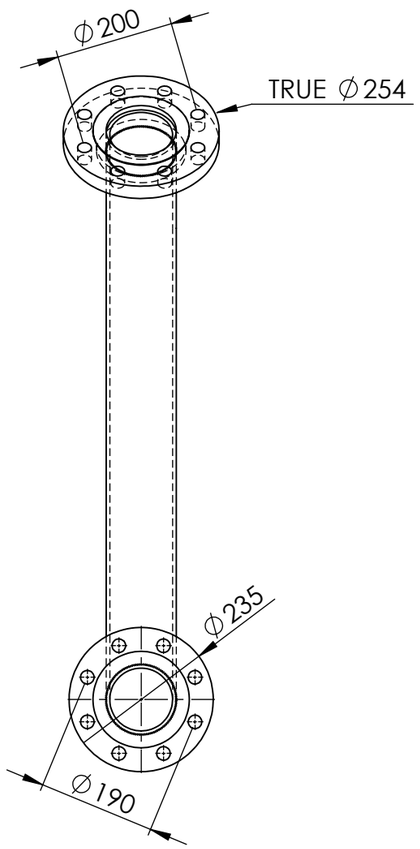

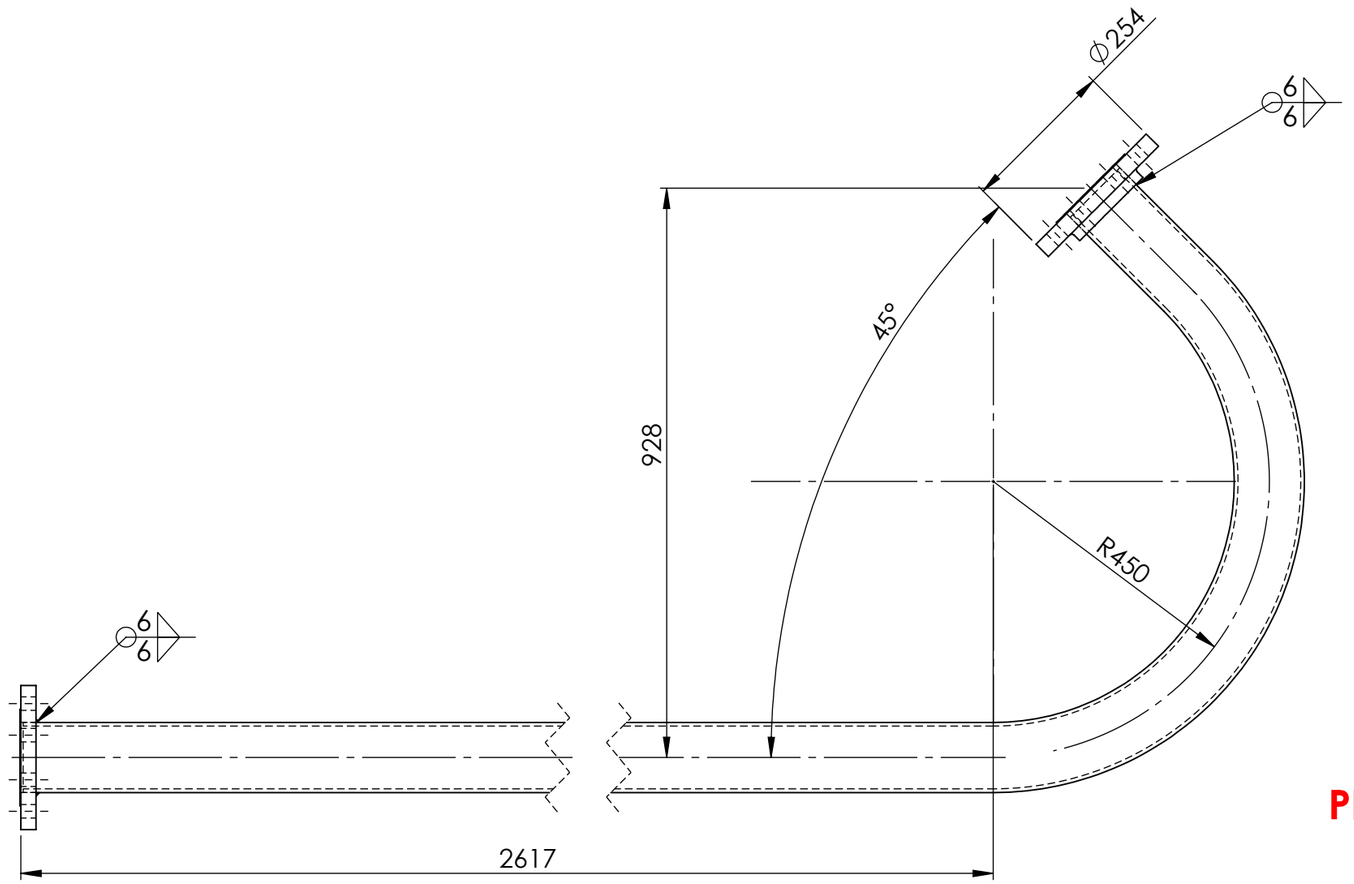

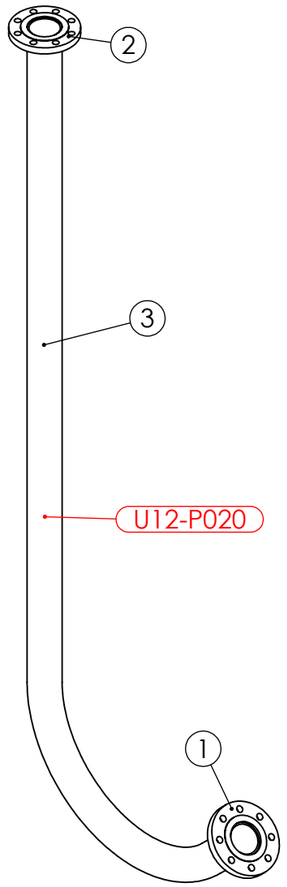

PIPE LABEL - U12-P020

PIPEWORK MANUFACTURED OF A JIG - FLANGES AS PER DRAWING
DIMENSIONS ARE APPROXIMATE

AS INSTALLED 13/3/25

UNIT 12 VALVE 2921 DOWN STREAM PIPE 1 WEIGHT - 79.03 kg

REV	NAME & DATE	DESCRIPTION

UNLESS OTHERWISE SPECIFIED:
TOLERANCES: MACHINE + / - 0.25mm
FABRICATION + / - 1.0 mm

THIS DRG SUPPLIED BY
RODDY ENGINEERING
14 Waratah St, TUMUT NSW 2720
Ph: 02 6947 4039

DRAWING No. 12-2921-1
REV:

DRAWN N DE BRUYN 17/04/2024
DRAWING CHECKED
DESIGNED
DESIGN CHECKED
SCALE 1:10
WORK ORDER No
APPROVED
SECTION No/KKS
A3 SHEET SIZE

snowyhydro LIMITED

M2 POWER STATION UNIT 12
VALVE 2921 DOWN STREAM PIPE 1

SMA-DRG-NO

REV

SHEET 1 OF 1

0,0