ITEM	DRAWING No	DESCRIPTION	QTY.	MASS (kg)
1	OEM-100NB-T-40-316L	100NB BUTT WELD TEE SHED 40 316L S/S	1	4.0
2	OEM-100NB-JIS30K-C-O-316L	100NB FLANGE JIS 30 K TYPE C 316L S/S MACHINED ORING GROOVE	1	7.95
3	OEM-100NB-300-SO-316L	100NB - 300lb SLIP ON FLANGE 316L S/S	2	9.53
4	OEM-1_2-BSPP-3000-316L	1/2 BSPP 3000 Lb HALF COUPLING 316L S/S	1	0.06
5	12-2923-1-1	100NB SHED 40 PIPE 316 S/S	1	10.14

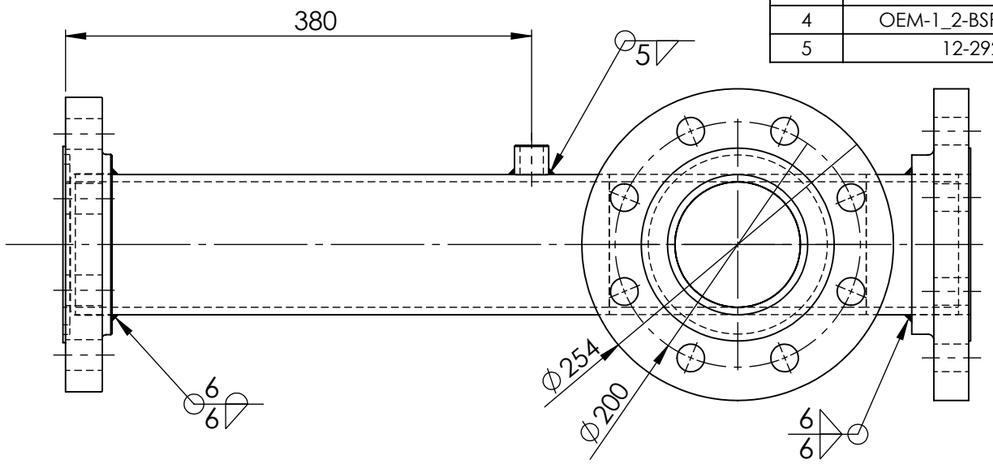

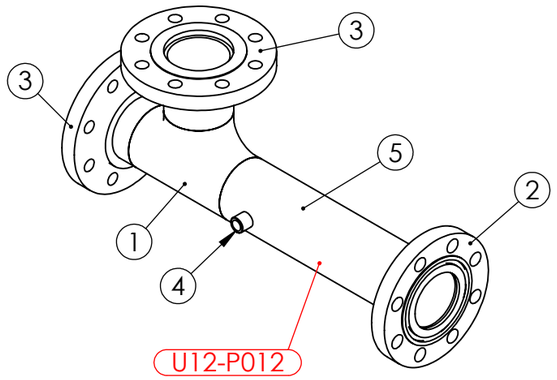

PIPE LABEL - U12-P012

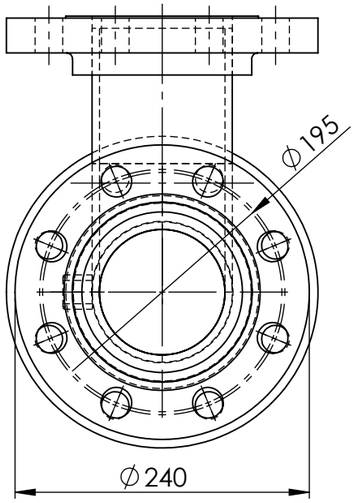

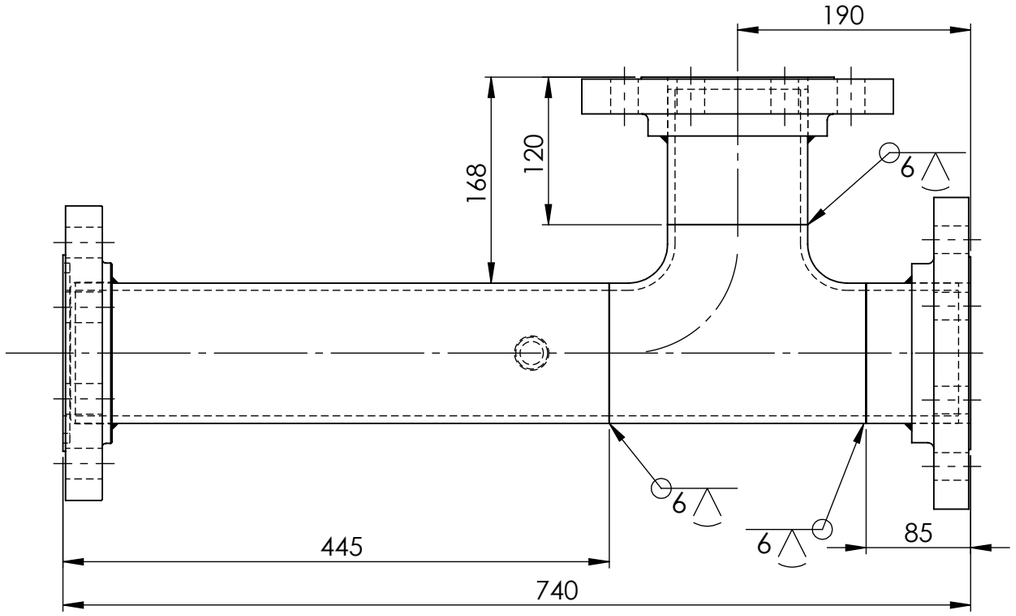

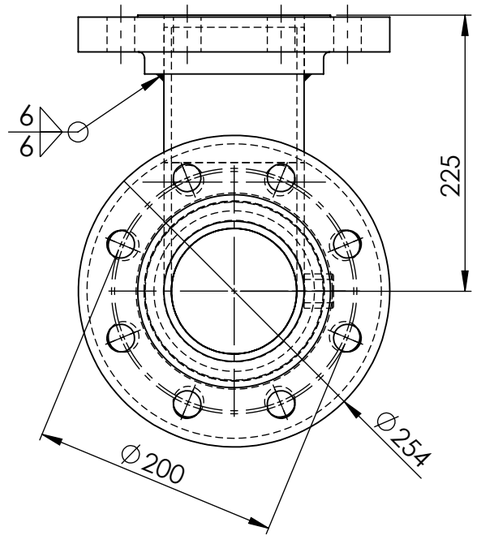

PIPEWORK MANUFACTURED OF A JIG - FLANGES AS PER DRAWING DIMENSIONS ARE APPROXIMATE

AS INSTALLED 14/3/25

UNIT 12 VALVE 2923 DOWN STREAM PIPE WEIGHT -41.16 kg

			UNLESS OTHERWISE SPECIFIED: TOLERANCES: MACHINE + / - 0.25mm FABRICATION + / - 1.0 mm	DRAWN N DE BRUYN 17/04/2024	DRAWING CHECKED
			THIS DRG SUPPLIED BY RODDY ENGINEERING 14 Waratah St, TUMUT NSW 2720 Ph: 02 6947 4039	DESIGNED	DESIGN CHECKED
				SCALE 1:5 WORK ORDER No	APPROVED
REV	NAME & DATE	DESCRIPTION	DRAWING No. 12-2923-1 REV:	SECTION No/KKS	A3 SHEET SIZE

snowyhydro LIMITED

M2 POWER STATION UNIT 12
VALVE 2923 DOWN STREAM PIPE

SMA-DRG-NO

REV

SHEET 1 OF 1

0,0