ITEM	DRAWING No	DESCRIPTION	QTY.	MASS (kg)
1	OEM-80NB-JIS30K-C-O-316L	80NB FLANGE JIS 30 K TYPE C 316L S/S MACHINED ORING GROOVE	1	5.62
2	OEM-80NB-300-SF-316L	80NB - 300lb SLIP ON FLANGE 316L S/S	1	6.08
3	OEM-80-LR-40-316L	80NB LONG RADIUS BEND SHED 40 316L S/S	1	2.06
4	J003435-69	80NB SHED 40 PIPE x 90 DEGREE BEND 400R	1	43.36
5	J003435-56	80NB SHED 40 PIPE x 145 DEGREE BEND 375R	1	17.63
6	12-2931B-1	80NB SHED 40 PIPE 316L S/S	1	1.56
7	OEM-1_2-BSPP-3000-316L	1/2 BSPP 3000 Lb HALF COUPLING 316L S/S	1	0.06

RED EYE QR CODE AREA

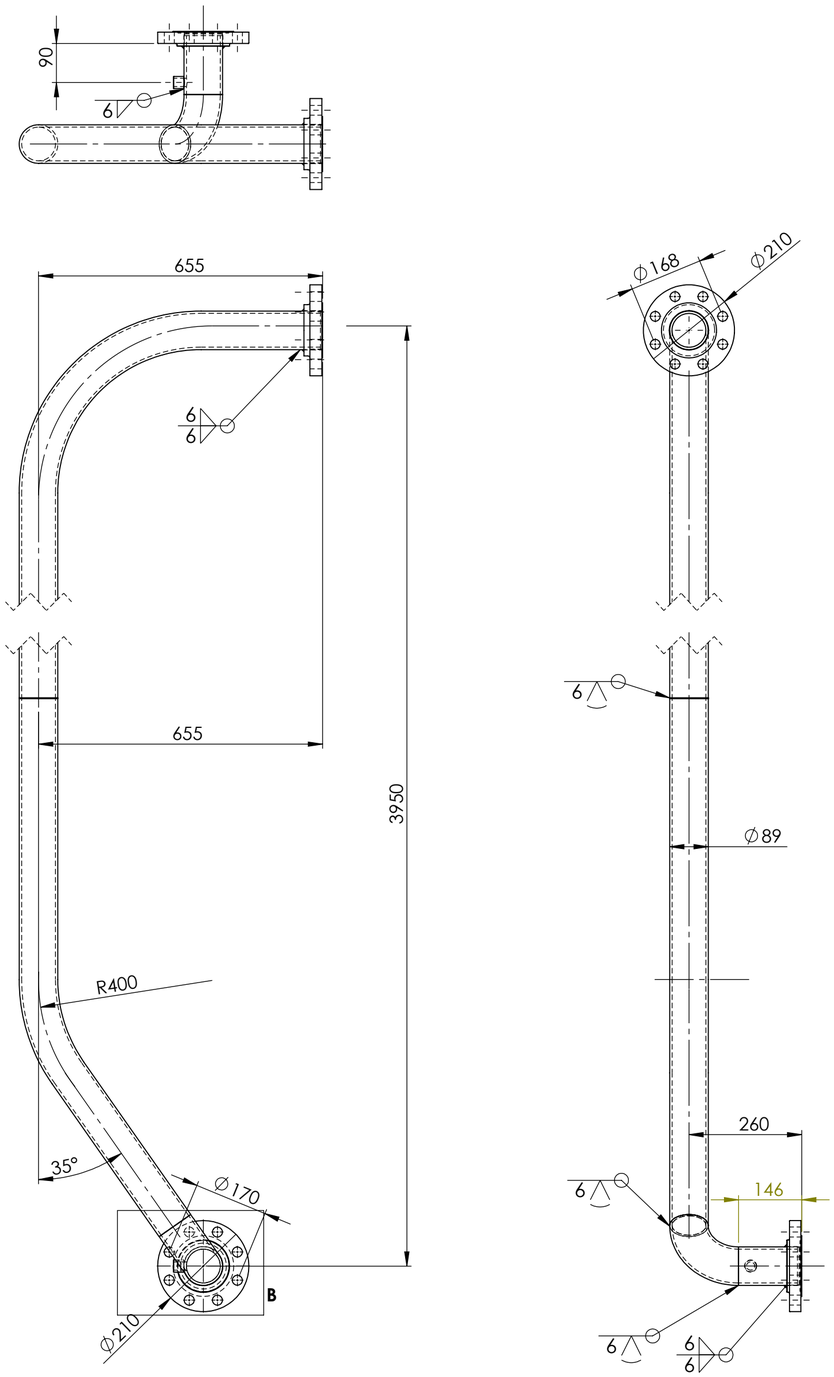

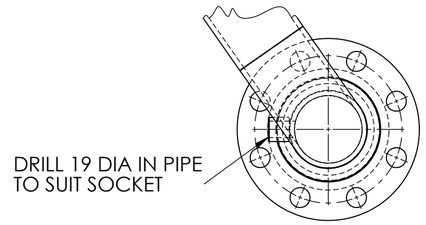

DETAIL B
SCALE **1 : 5**

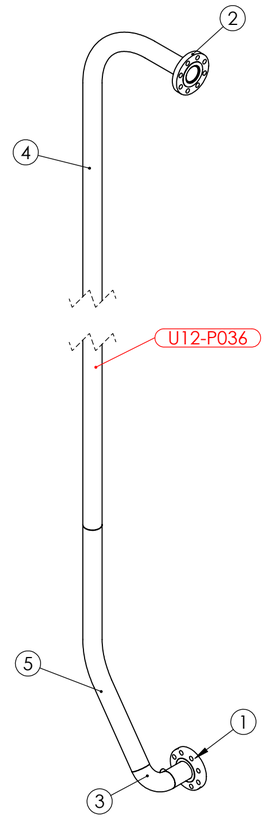

PIPE LABEL - U12-P036

PIPEWORK MANUFACTURED OF A JIG - FLANGES AS PER DRAWING
DIMENSIONS ARE APPROXIMATE

AS INSTALLED 14/3/25

UNIT 12 VALVE 2931B DOWNSTREAM PIPE 1 WEIGHT - 66.44 kg

REV	NAME & DATE	DESCRIPTION

UNLESS OTHERWISE SPECIFIED:
TOLERANCES: MACHINE + / - 0.25mm
FABRICATION + / - 1.0 mm

THIS DRG SUPPLIED BY
RODDY ENGINEERING
14 Waratah St, TUMUT NSW 2720
Ph: 02 6947 4039

DRAWING No. 12-2931B-1 REV:

DRAWN N DE BRUYN 18/04/2024
DRAWING CHECKED
DESIGNED
DESIGN CHECKED
SCALE 1:10
WORK ORDER No
APPROVED
SECTION No/KKS
A2 SHEET SIZE

snowyhydro LIMITED

M2 POWER STATION UNIT 12
VALVE 2931B DOWNSTREAM PIPE 1

SMA-DRG-NO

REV

SHEET 1 OF 1