DIMENSIONS IN MILLIMETRES

ITEM	DRAWING No	DESCRIPTION	QTY.	MASS (kg)
1	OEM-80NB-JIS30K-C-O-316L	80NB FLANGE JIS 30 K TYPE C 316L S/S MACHINED ORING GROOVE	1	5.62
2	OEM-80NB-300-SF-316L	80NB - 300lb SLIP ON FLANGE 316L S/S	1	6.08
3	J003435-57	80NB SHED 40 VALVE 2931B PIPE #4	1	29.07

RED EYE QR CODE AREA

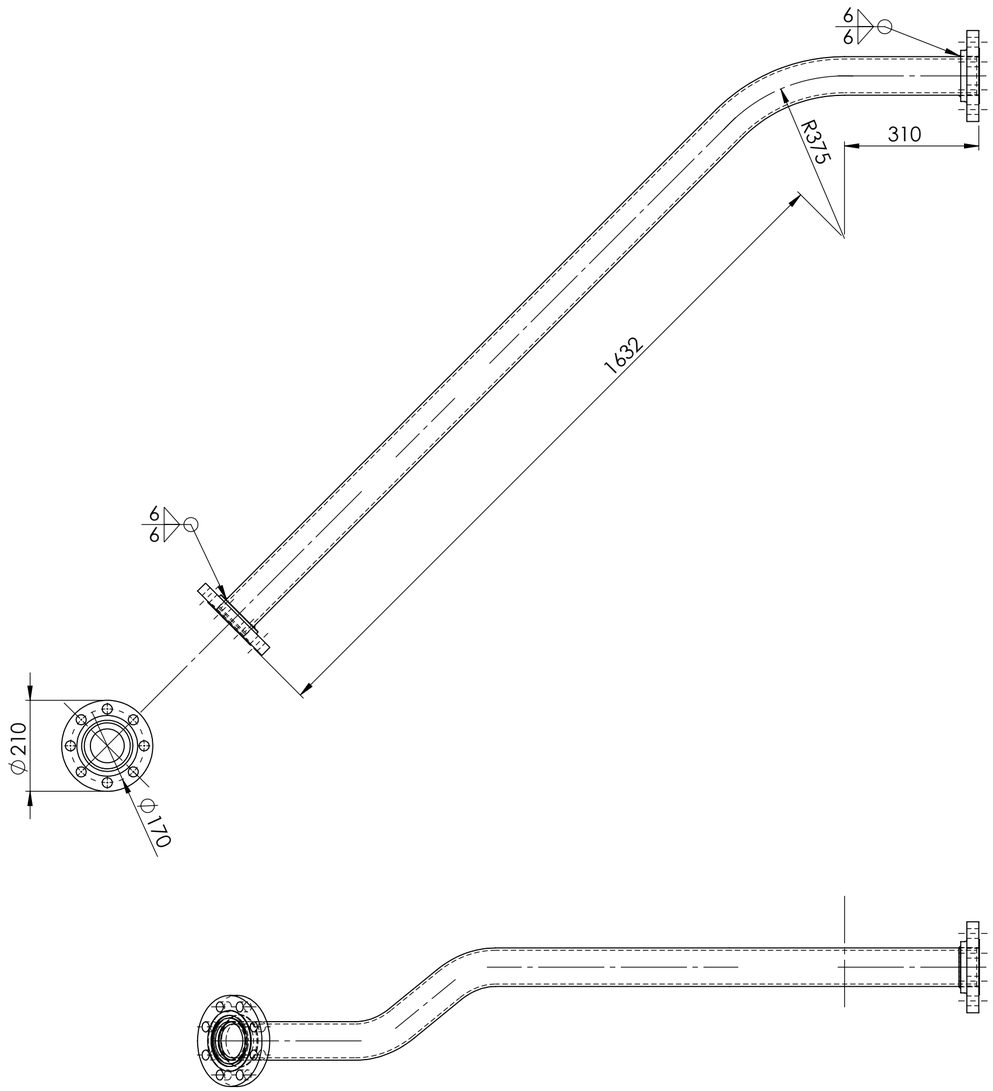

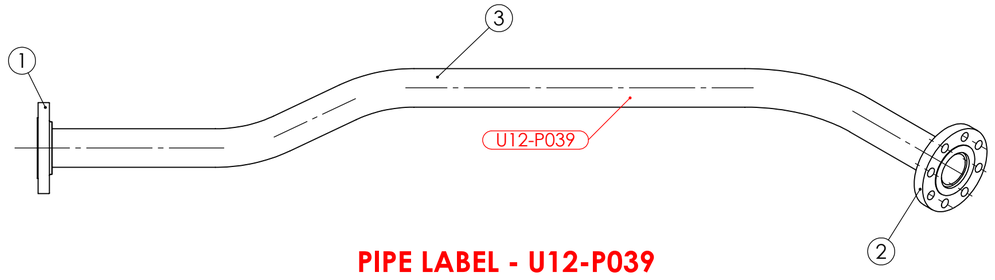

PIPE LABEL - U12-P039

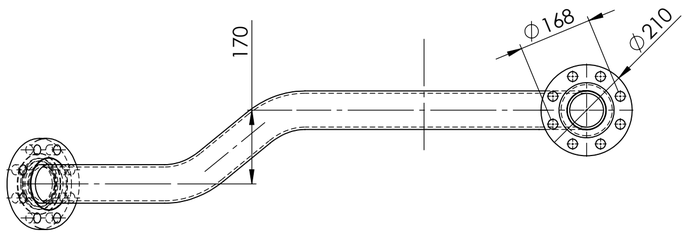

PIPEWORK MANUFACTURED OF A JIG - FLANGES AS PER DRAWING
DIMENSIONS ARE APPROXIMATE

UNIT 12 VALVE 2931B DOWN STREAM PIPE 4 WEIGHT - 37.64 kg

AS INSTALLED 14/3/25

REV	NAME & DATE	DESCRIPTION

UNLESS OTHERWISE SPECIFIED:
TOLERANCES: MACHINE + / - 0.25mm
FABRICATION + / - 1.0 mm

THIS DRG SUPPLIED BY
RODDY ENGINEERING
14 Waratah St, TUMUT NSW 2720
Ph: 02 6947 4039

DRAWING No. 12-2931B-4 REV:

DRAWN N DE BRUYN 18/04/2024
DRAWING CHECKED
DESIGNED
DESIGN CHECKED
SCALE 1:10
APPROVED
WORK ORDER No
SECTION No/KKS
A2 SHEET SIZE

snowyhydro LIMITED

M2 POWER STATION UNIT 12
VALVE 2931B DOWN STREAM PIPE 4

SMA-DRG-NO

REV

SHEET 1 OF 1