DIMENSIONS IN MILLIMETRES

ITEM NO.	DESCRIPTION	LENGTH	MATERIAL	MASS (kg)
1	114x3.100 CHS	500	316L STAINLESS STEEL	4.30

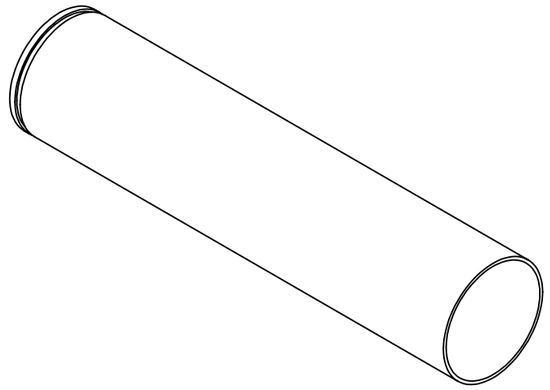

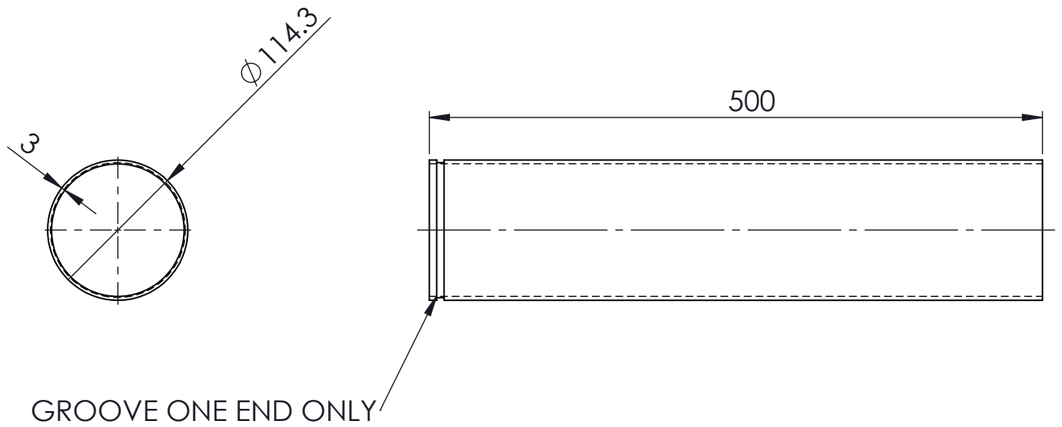

MATERIAL:- 316L STAINLESS STEEL

100NB SHED 10 PIPE 316 SS VICTAULIC GROOVED WEIGHT - 4.30 kg

UNLESS OTHERWISE SPECIFIED: TOLERANCES: MACHINE + / - 0.25mm FABRICATION + / - 1.0 mm

DIMENSIONS IN MILLIMETRES

THIS DRAWING IS THE PROPERTY OF MECHANICAL ENGINEERING & CAD SERVICES (MECS) Pty Ltd & MUST NOT BE MANUFACTURED FROM,COPIED OR TRANSMITTED TO A THIRD PARTY WITHOUT THE PRIOR APPROVAL FROM MECHANICAL ENGINEERING & CAD SERVICES (MECS) Pty Ltd

MECS
Mechanical Engineering & CAD Services
11 Campbell Place WAGGA NSW 2650
Ph: - 0409 985 816
Email: nick@mecservices.com.au

THIRD ANGLE PROJECTION

CLIENT

RODDY ENGINEERING
14 Waratah St TUMUT NSW 2720
Ph: - 02 6947 4039
Email: roddyeng.com.au

TITLE: 100NB SHED 10 PIPE 316 SS VICTAULIC GROOVED

DWG NO. 12-2933-1-1 REV A3

DRAWN N DE BRUYN DATE 17/04/2024 SCALE:1:5 SHEET 1 OF 1