ITEM	DRAWING No	DESCRIPTION	QTY.	MASS (kg)
1	J003435-72	100NB PLATE FLANGE JIS30K - 316L S/S	1	4
2	12-2933-1-1	100NB SHED 10 PIPE 316 SS VICTAULIC GROOVED	1	4.30

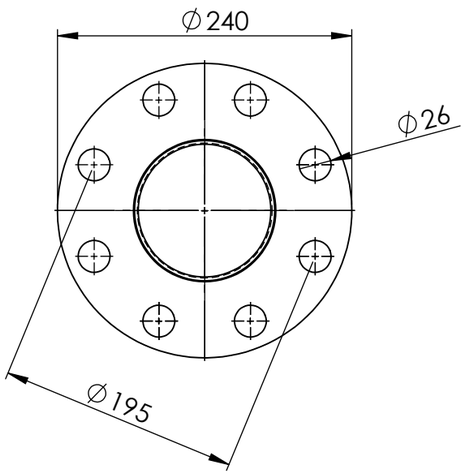

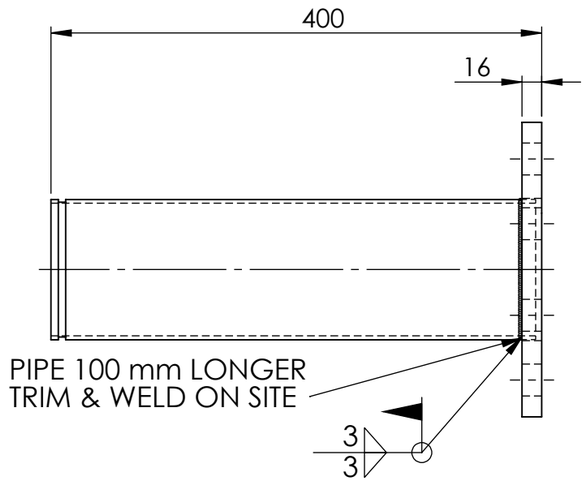

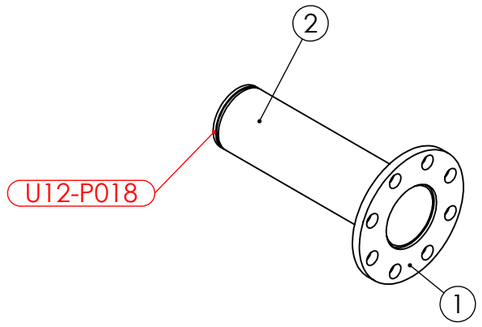

PIPE LABEL - U12-P018

PIPEWORK MANUFACTURED OF A JIG - FLANGES AS PER DRAWING
DIMENSIONS ARE APPROXIMATE

AS INSTALLED 14/3/25

UNIT 12 VALVE 2933-1 DOWN STREAM PIPE 1 WEIGHT - 7.28 kg

REV	NAME & DATE	DESCRIPTION	UNLESS OTHERWISE SPECIFIED: TOLERANCES: MACHINE + / - 0.25mm FABRICATION + / - 1.0 mm	DRAWN N DE BRUYN 27/03/2024	DRAWING CHECKED
			THIS DRG SUPPLIED BY RODDY ENGINEERING 14 Waratah St, TUMUT NSW 2720 Ph: 02 6947 4039	DESIGNED	DESIGN CHECKED
			DRAWING No. 12-2933-1 REV:	SCALE 1:5 WORK ORDER No	APPROVED
				SECTION No/KKS	A3 SHEET SIZE

snowyhydro LIMITED

M2 POWER STATION UNIT 12
VALVE 2933-1 DOWN STREAM PIPE 1

SMA-DRG-NO

REV

SHEET 1 OF 1