ITEM	DRAWING No	DESCRIPTION	QTY.	WEIGHT
1	OEM-200-JIS40-P-316L	200NB JIS 40K PLATE FLANGE 316L S/S	2	31.37
2	OEM-200-LR-40-316L	200NB LONG RADIUS BEND SHED 40 316L S/S	1	20.8
3	14-2450-1-1	200NB PIPE SHED 40 316L	1	45.20

RED EYE QR CODE AREA

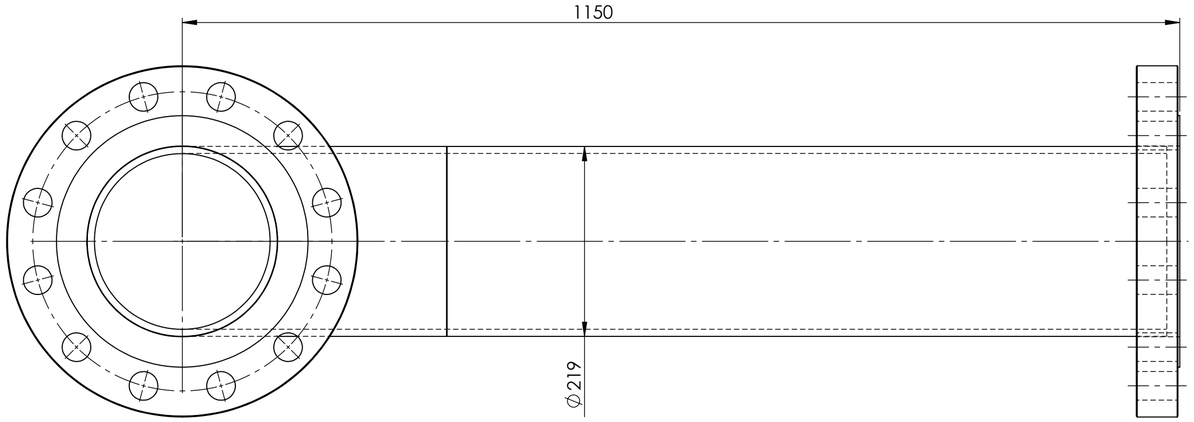

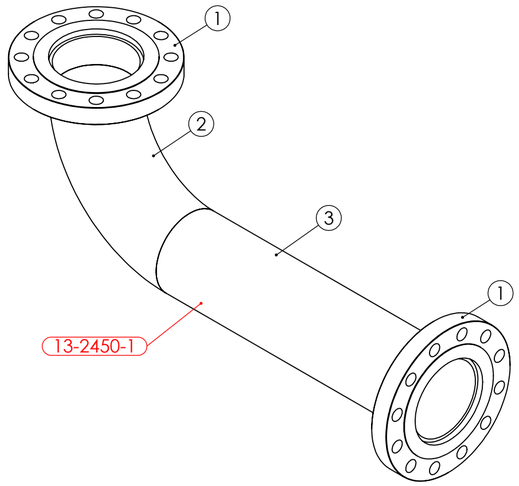

PIPE LABEL - 13-2450-1

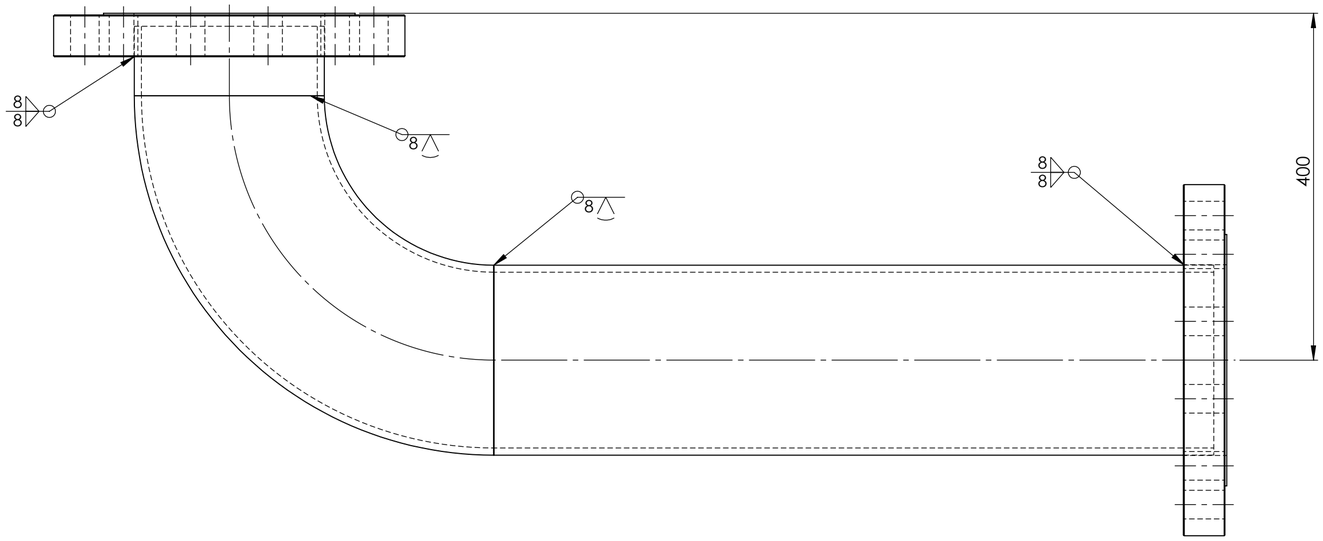

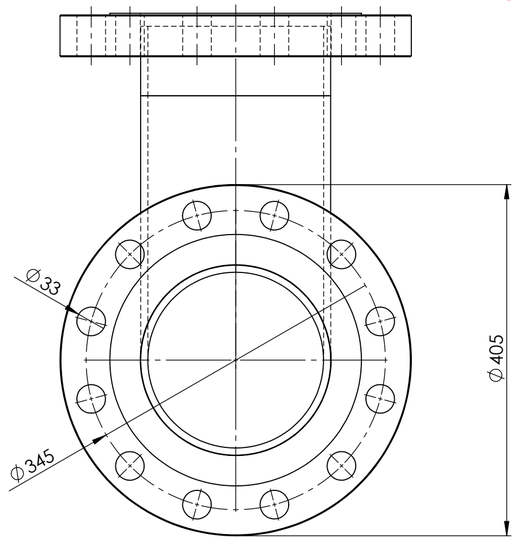

ISSUED FOR CONSTRUCTION 27/9/25

NOTES:
-FLANGES ARE TO BE WELDED & INSPECTED IN ACCORDANCE WITH SHL-MEC-119
-ALL PIPEWORK SHALLBE PRESSURE TESTED & CLEANED INTERNALLY AS PER SHL-MEC-119
-PIPEWORK SHALL BE SETUP IN WORKSHOP AS PER SITE INSTALLATION PRIOR TO WELDING NEW FLANGES

PIPE BETWEEN VALVE 2450 & 2451 WEIGHT - 123.11 kg

REV	NAME & DATE	DESCRIPTION

UNLESS OTHERWISE SPECIFIED:
TOLERANCES: MACHINE + / - 0.25mm
FABRICATION + / - 1.0 mm

THIS DRG SUPPLIED BY
RODDY ENGINEERING
14 Waratah St, TUMUT NSW 2720
Ph: 02 6947 4039

DRAWING No. 13-2450-1
REV:

DRAWN N DE BRUYN 17/09/2025
DRAWING CHECKED
DESIGNED
DESIGN CHECKED
SCALE 1:5
APPROVED
WORK ORDER No
SECTION No/KKS
A2 SHEET SIZE

snowyhydro LIMITED

M2 POWER STATION UNIT 13
PIPE BETWEEN VALVLE 2450 & 2451

SMA-DRG-NO

REV

SHEET 1 OF 1