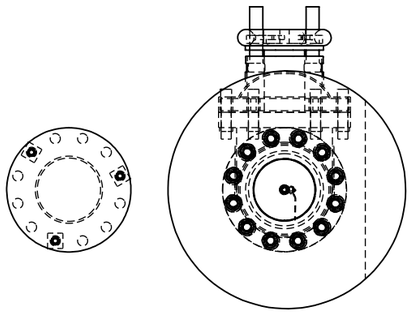

ITEM	DRAWING No	DESCRIPTION	QTY.	WEIGHT
1	OEM-MY- 22x57	1 1/"8" MYLAR INSULATION SLEEVE 57 LONG	12	0.00
2	OEM-2450-SHL	200NB GATE VALVE	1	0.0
3	OEM-200-JIS40K-3	200NB JIS40K 3.0 mm C-4430 GASKET	2	0.4
4	J004232-107	200NB JIS 40K BLIND FLANGE MS THIN	1	6.0
5	J004232-105	200NB JIS40K BLANKING TEST FLANGE	1	
6	1-18_UNC-AT-135	1 1/8" UNC ALL THREAD Gr 8 x 135 LONG	12	0.67
7		1 1/8" FLAT G10 EXPOY WASHER	12	0.01
8		1 1/8" FLAT WASHER HIGH TENSILE ZP (57x32x4)	12	0.05
9		1 1/8" UNC HEX NUT ZP	12	0.2
10		M16 SQUARE GAL WASHER	3	
11		M16x2.0 HEX ZP NUT	3	
12		M16x2.0 x 50 HEX ZP BOLT Gr 8.8	3	0.1
13		M30 FLAT WASHER 304 S/S (56x33x3)	24	
14		M30x3.5 HEX NUT 304 S/S	12	
15		M30x3.5 x 150 HEX BOLT 304 S/S	12	

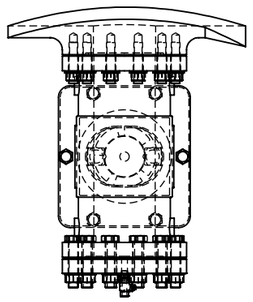

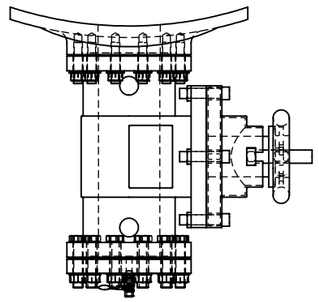

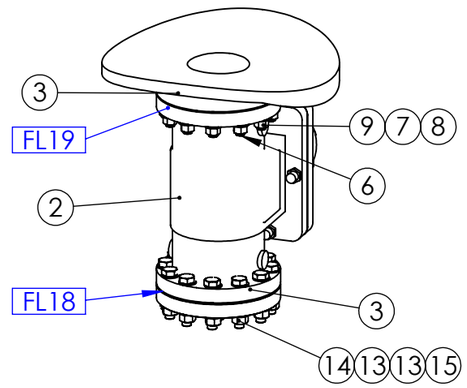

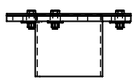

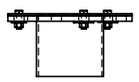

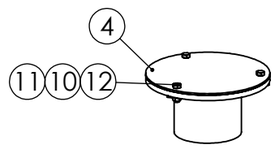

UNLESS OTHERWISE SPECIFIED: TOLERANCES: MACHINE + / - 0.25mm FABRICATION + / - 1.0 mm

DIMENSIONS IN MILLIMETRES

THIS DRAWING IS THE PROPERTY OF MECHANICAL ENGINEERING & CAD SERVICES (MECS) Pty Ltd & MUST NOT BE MANUFACTURED FROM,COPIED OR TRANSMITTED TO A THIRD PARTY WITHOUT THE PRIOR APPROVAL FROM MECHANICAL ENGINEERING & CAD SERVICES (MECS) Pty Ltd

MECS
Mechanical Engineering & CAD Services
11 Campbell Place WAGGA NSW 2650
Ph: - 0409 985 816
Email: nick@mecservices.com.au

THIRD ANGLE PROJECTION

CLIENT

RODDY ENGINEERING
14 Waratah St TUMUT NSW 2720
Ph: - 02 6947 4039
Email: roddyeng.com.au

TITLE: VALVES 2450 DEWATERING PENSTOCK

DWG NO. 13-2450-DW | REV | A3

DRAWN N DE BRUYN | DATE 2/10/2025 | SCALE:1:20 | SHEET 1 OF 1