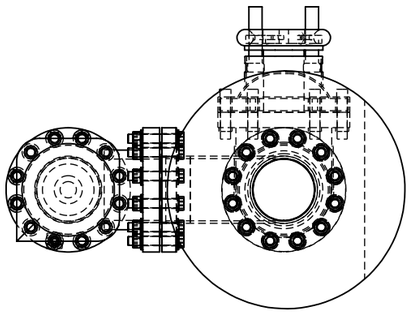

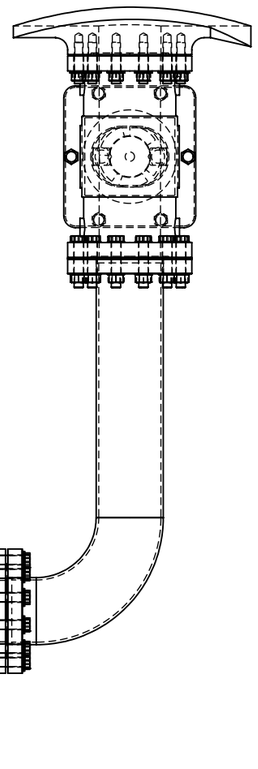

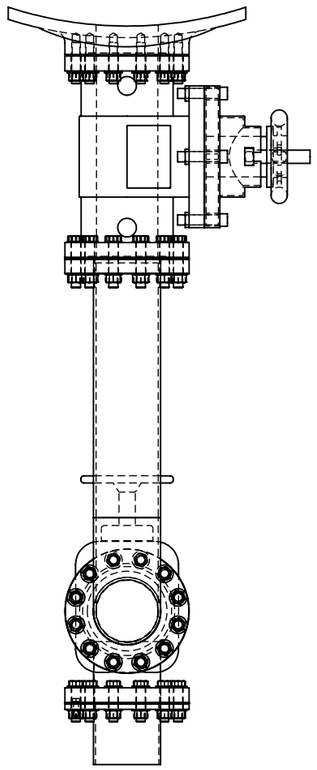

ITEM	DRAWING No	DESCRIPTION	QTY.	WEIGHT
1	OEM-MY- 22x120	1 1/8" DIA MYLAR INSULATION SLEEVE 120 LONG	12	0.01
2	OEM-MY- 22x57	1 1/"8" MYLAR INSULATION SLEEVE 57 LONG	12	0.00
3	OEM-2451-SHL	VALVE 2451 - 200NB GLOBE	1	0.00
4	OEM-2450-SHL	200NB GATE VALVE	1	0.0
5	OEM-200-JIS40K-15	200NB JIS40K 1.5mm C-4400 GASKET	2	0
6	OEM-200-JIS40K-3	200NB JIS40K 3.0 mm C-4430 GASKET	3	0.4
7	J004229-107	200NB JIS 40K BLANKING FLANGE	1	1.0
8	13-2450-1	PIPE BETWEEN VALVE 2450 & 2451	1	
9	1-18_UNC-AT-135	1 1/8" UNC ALL THREAD Gr 8 x 135 LONG	12	0.67
10		1 1/8" FLAT G10 EXPOY WASHER	36	0.01
11		1 1/8" FLAT WASHER HIGH TENSILE ZP (57x32x4)	60	0.05
12		1 1/8" UNC HEX NUT ZP	36	0.2
13		1 1/8" UNC x 4 1/2" HEX BOLT Gr 8 ZP	12	0.8
14		1 1/8" UNC x 6 1/2" HEX BOLT Gr 8 ZP	12	1.0
15		M16 SQUARE GAL WASHER	1	
16		M16x2.0 HEX ZP NUT	1	
17		M16x2.0 x 50 HEX ZP BOLT Gr 8.8	1	0.1
18		M30 FLAT WASHER 304 S/S (56x33x3)	24	
19		M30x3.5 HEX NUT 304 S/S	12	
20		M30x3.5 x 150 HEX BOLT 304 S/S	12	

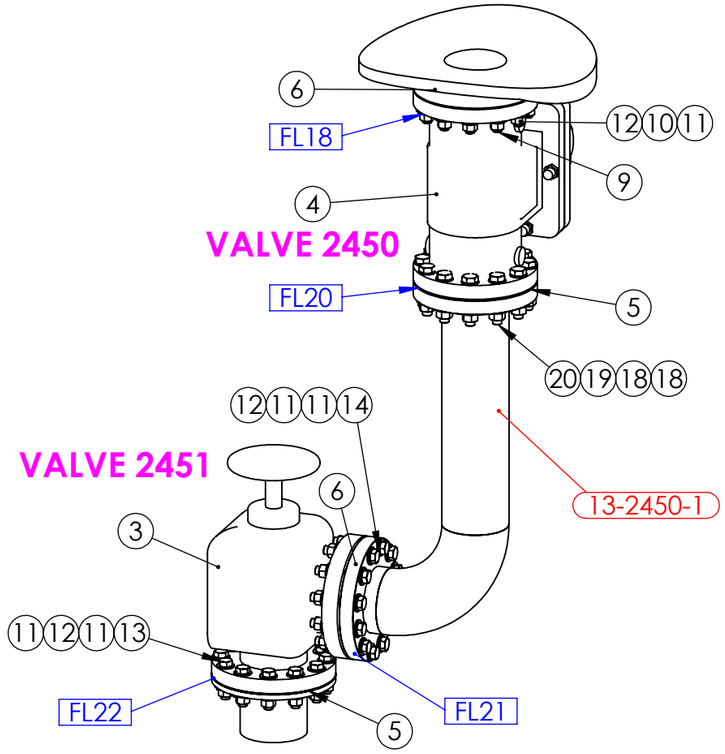

REV	NAME & DATE	DESCRIPTION

UNLESS OTHERWISE SPECIFIED:
TOLERANCES: MACHINE + / - 0.25mm
FABRICATION + / - 1.0 mm

THIS DRG SUPPLIED BY
RODDY ENGINEERING
14 Waratah St, TUMUT NSW 2720
Ph: 02 6947 4039

DRAWING No. 13-2450
REV:

DRAWN N DE BRUYN 8/08/2025
DRAWING CHECKED
DESIGNED
DESIGN CHECKED
SCALE 1:20
APPROVED
WORK ORDER No
SECTION No/KKS
A3 SHEET SIZE

snowyhydro LIMITED

M2 POWER STATION
UNIT 13
VALVES 2450 & 2451

SMA-DRG-NO

REV

SHEET 1 OF 1

0,0