DIMENSIONS IN MILLIMETRES

ITEM	DRAWING No	DESCRIPTION	QTY.	MASS (kg)
1	OEM-2609-SHL	250NB GATE VALVE TABLE F FLANGE DRILLED TABLE E	2	0.00
2	OEM-2608-SHL	250NB SWING CHECK VALVE TABLE F FLANGE DRILLED TABLE E	2	0.00
3	OEM-250-E-15	250NB AS2129-TABLE E 1.5mm C-4400 GASKET	6	
4	OEM-250-D-15	250NB AS2129-TABLE D 1.5mm C-4400 GASKET	1	
5	3-4_UNC-AT-120	3/4" UNC ALL THREAD GRADE 8- 120 LONG	8	0.27
6		3/4" FLAT WASHER HIGH TENSILE ZP (37x21x4)	144	
7		3/4" UNC HEX NUT ZINC PLATED	80	0.1
8		3/4"UNC x 3 1/2" HEX BOLT ZP Gr 8	48	
9		3/4"UNC x 4" HEX BOLT ZP Gr 8	16	
10		M20 FLAT WASHER GAL(37x22x3)	16	
11		M20x2.5 HEX NUT GAL	8	
12		M20x2.5 x75 HEX BOLT GAL Gr 8.8	8	0.3

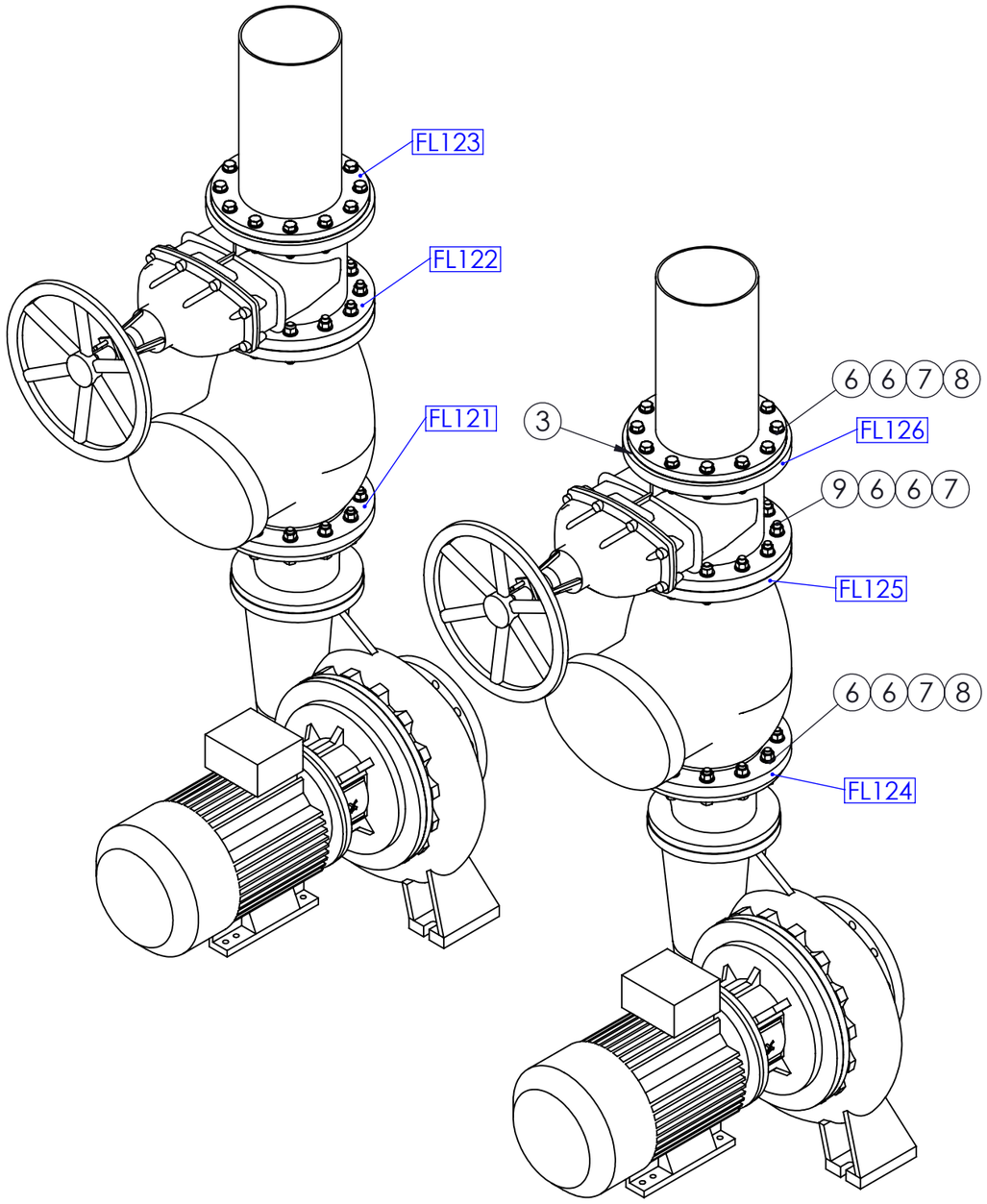

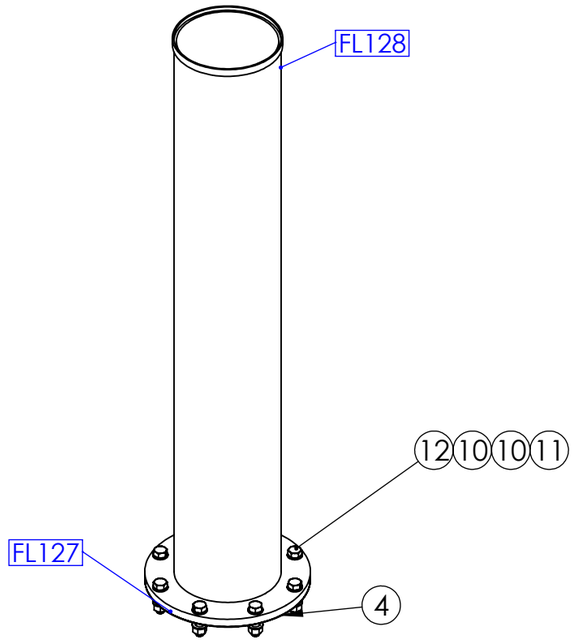

PIPE BESIDE GENERATOR
DOOR LEVEL 4

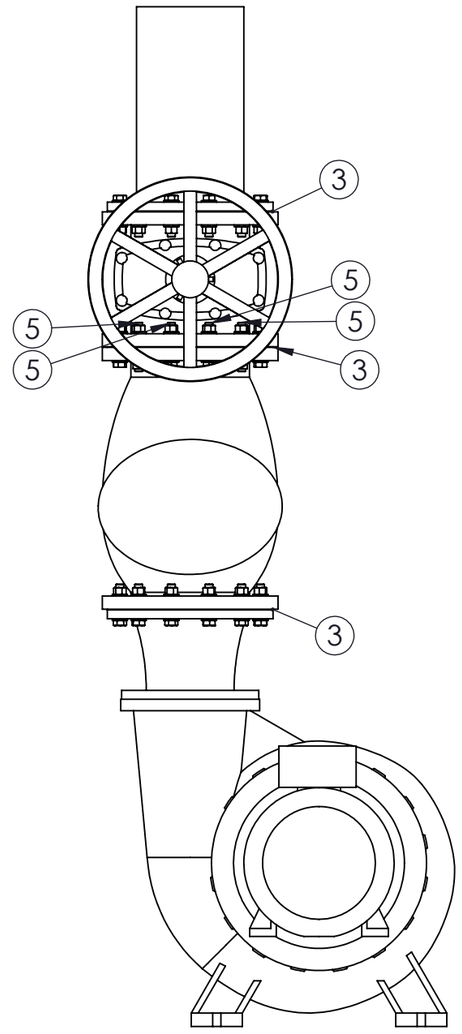

UNLESS OTHERWISE SPECIFIED: TOLERANCES: MACHINE + / - 0.25mm FABRICATION + / - 1.0 mm

DIMENSIONS IN MILLIMETRES

THIS DRAWING IS THE PROPERTY OF MECHANICAL ENGINEERING & CAD SERVICES (MECS) Pty Ltd & MUST NOT BE MANUFACTURED FROM,COPIED OR TRANSMITTED TO A THIRD PARTY WITHOUT THE PRIOR APPROVAL FROM MECHANICAL ENGINEERING & CAD SERVICES (MECS) Pty Ltd

MECS
Mechanical Engineering & CAD Services
11 Campbell Place WAGGA NSW 2650
Ph: - 0409 985 816
Email: nick@mecservices.com.au

THIRD ANGLE PROJECTION

CLIENT
RODDY ENGINEERING
14 Waratah St TUMUT NSW 2720
Ph: - 02 6947 4039
Email: roddyeng.com.au

TITLE: COOLING PUMP OUTLET VALVE FLANGE MANAGEMENT

DWG NO. 13-2609 REV A3

DRAWN N DE BRUYN DATE 3/12/2025 SCALE:1:15 SHEET 1 OF 1