ITEM	DRAWING No	DESCRIPTION	QTY.	MASS (kg)
1	OEM-80NB-JIS10K-316L	80NB PLATE FLANGE JIS 10K - 316L S/S	1	3
2	OEM-80NB-150-SO-316L	80NB - 150 Lb SLIP ON FLANGE 316L S/S	1	4.10
3	OEM-80-LR-40-316L	80NB LONG RADIUS BEND SHED 40 316L S/S	1	2.06
4	13-2844-1-1	80NB SHED 40 PIPE 316 S/S	1	3.64

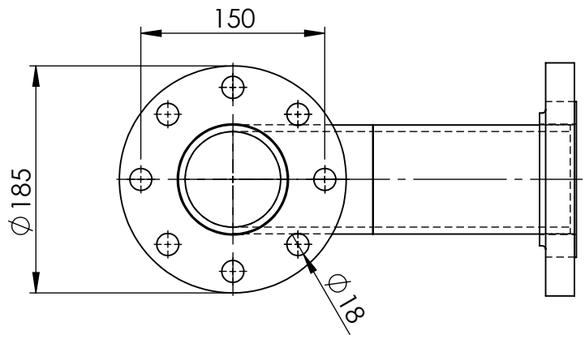

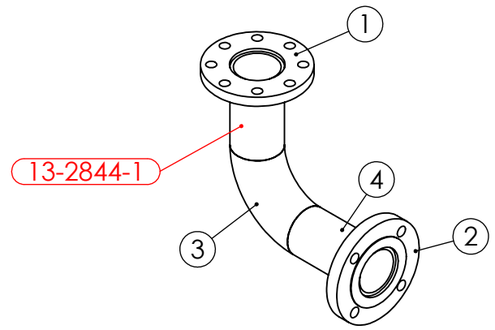

PIPE LABEL - 13-2844-1

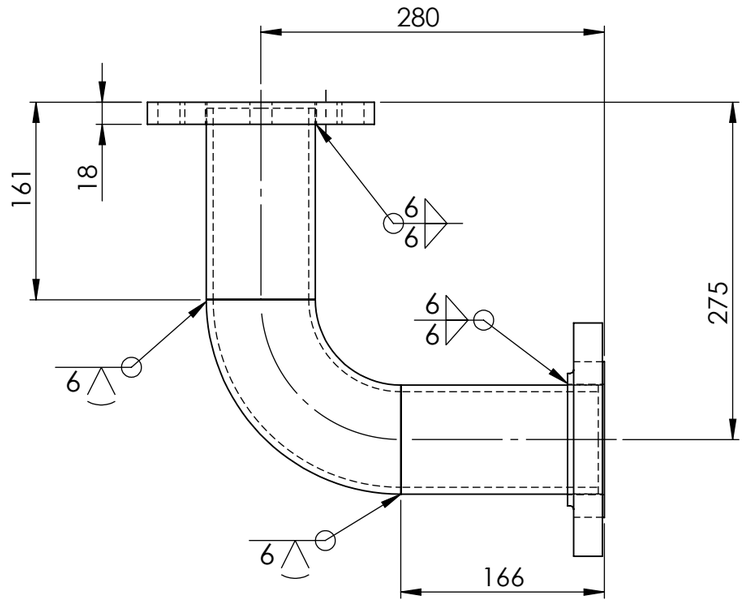

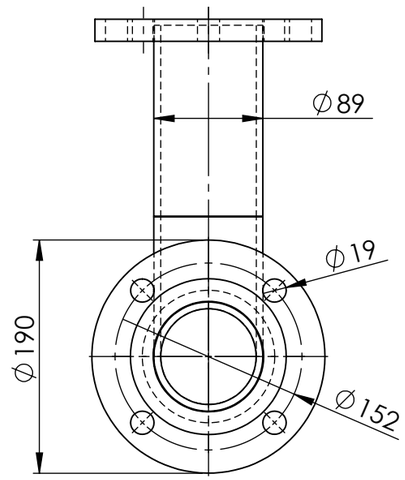

PIPEWORK MANUFACTURED OF A JIG - FLANGES AS PER DRAWING
DIMENSIONS ARE APPROXIMATE

UNIT 13 VALVE 2844 PIPE 1 WEIGHT - 12.46 kg

REV	NAME & DATE	DESCRIPTION

UNLESS OTHERWISE SPECIFIED:
TOLERANCES: MACHINE + / - 0.25mm
FABRICATION + / - 1.0 mm

THIS DRG SUPPLIED BY
RODDY ENGINEERING
14 Waratah St, TUMUT NSW 2720
Ph: 02 6947 4039

DRAWING No. 13-2844-1 REV:

DRAWN N DE BRUYN 17/09/2025
DRAWING CHECKED
DESIGNED
DESIGN CHECKED
SCALE 1:5
WORK ORDER No
APPROVED
SECTION No/KKS
A3 SHEET SIZE

snowyhydro LIMITED

M2 POWER STATION UNIT 13
VALVE 2844 DOWN STREAM PIPE

SMA-DRG-NO

REV

SHEET 4 OF 4

0,0