ITEM	DRAWING No	DESCRIPTION	QTY.	MASS (kg)
1	J004232-128	150NB JIG FLANGE 300Lb ANSI	2	6
2	13-2901-1	UNIT13 PIPE BETWEEN 2091 & 2902	1	71

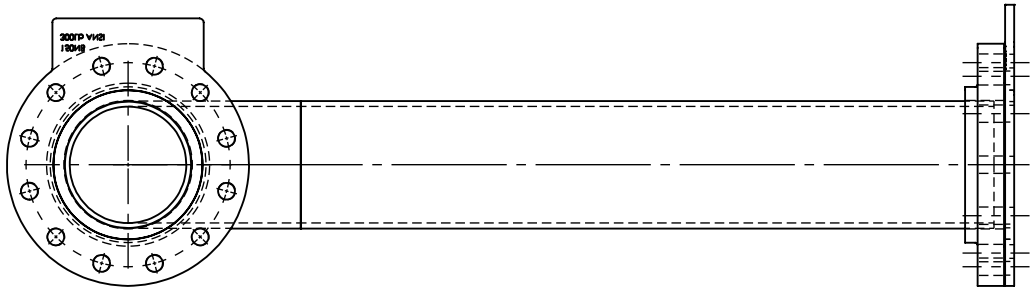

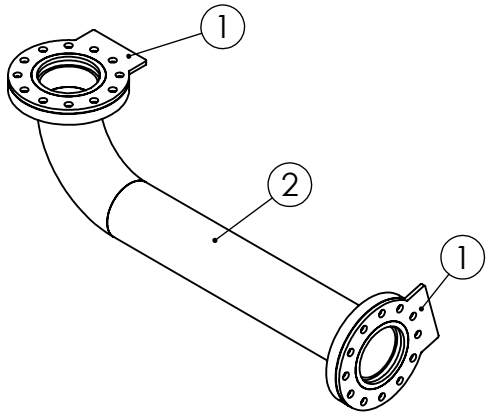

FOR INFORMATION ONLY

DO NOT MANUFACTURE

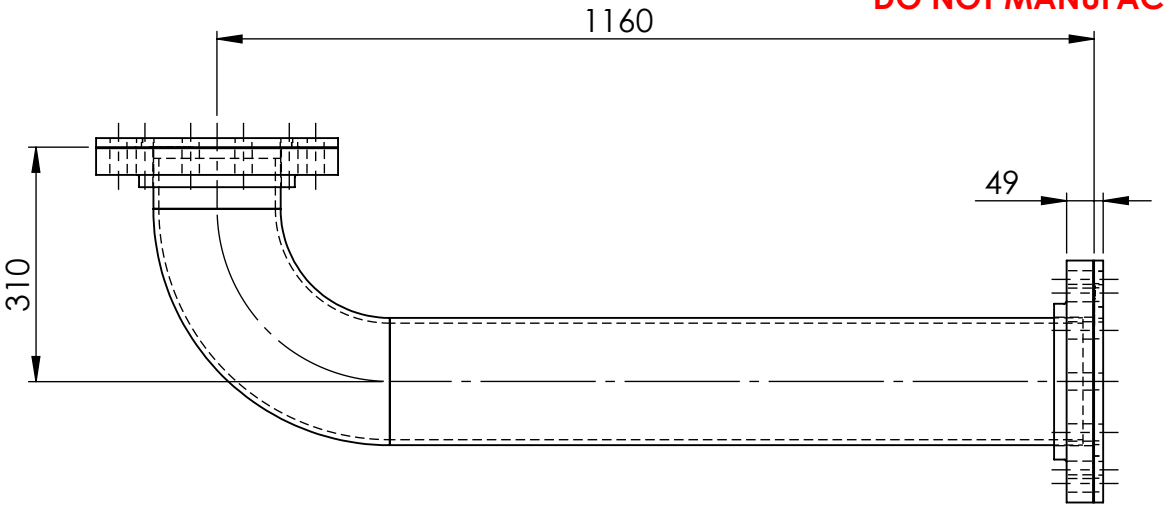

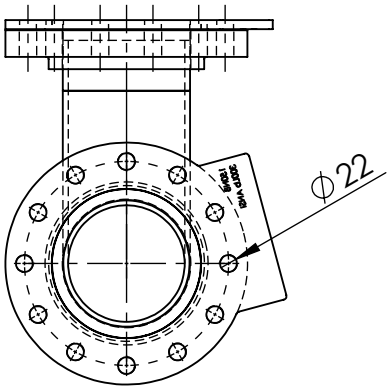

PIPEWORK TO BE MANUFACTURED OF A JIG - FLANGES AS PER DRAWING
DIMENSIONS ARE APPROXIMATE - IF MAJOR DISCREPENCIES ADVISE SUPERVISOR

MATERIAL:-

UNLESS OTHERWISE SPECIFIED: TOLERANCES: MACHINE + / - 0.25mm FABRICATION + / - 1.0 mm

DIMENSIONS IN MILLIMETRES

THIS DRAWING IS THE PROPERTY OF MECHANICAL ENGINEERING & CAD SERVICES (MECS) Pty Ltd & MUST NOT BE MANUFACTURED FROM,COPIED OR TRANSMITTED TO A THIRD PARTY WITHOUT THE PRIOR APPROVAL FROM MECHANICAL ENGINEERING & CAD SERVICES (MECS) Pty Ltd

MECS
Mechanical Engineering & CAD Services
11 Campbell Place WAGGA NSW 2650
Ph: - 0409 985 816
Email: nick@mecservices.com.au

THIRD ANGLE PROJECTION

WEIGHT: kg

CLIENT

RODDY ENGINEERING
14 Waratah St TUMUT NSW 2720
Ph: - 02 6947 4039
Email: roddyeng.com.au

TITLE: PIPE BETWEEN VALVE 2901 & 2902 - JIG SETUP

DWG NO. 13-2901-1-JIG

A4

DRAWN N DE BRUYN DATE 2/10/2025 SCALE:1:10 SHEET 1 OF 1