ITEM	DRAWING No	DESCRIPTION	QTY.	MASS (kg)
1	OEM-80NBx40-T-40-316L	80NB x 40NB BUTT WELD REDUCING TEE 316L S/S	1	2.31
2	OEM-80NB-JIS30K-P-316L	80NB PLATE FLANGE JIS 30 K 316L S/S	1	5.32
3	OEM-80NB-300-SO-316L	80NB - 300lb SLIP ON FLANGE 316L S/S	1	6.08
4	OEM-40-300-SO-316L	40NB FLANGE ANSI 300 LB SLIP ON 316L S/S	1	3
5	13-2904-3-1	40NB SHED 40 PIPE 316L S/S	1	0.47

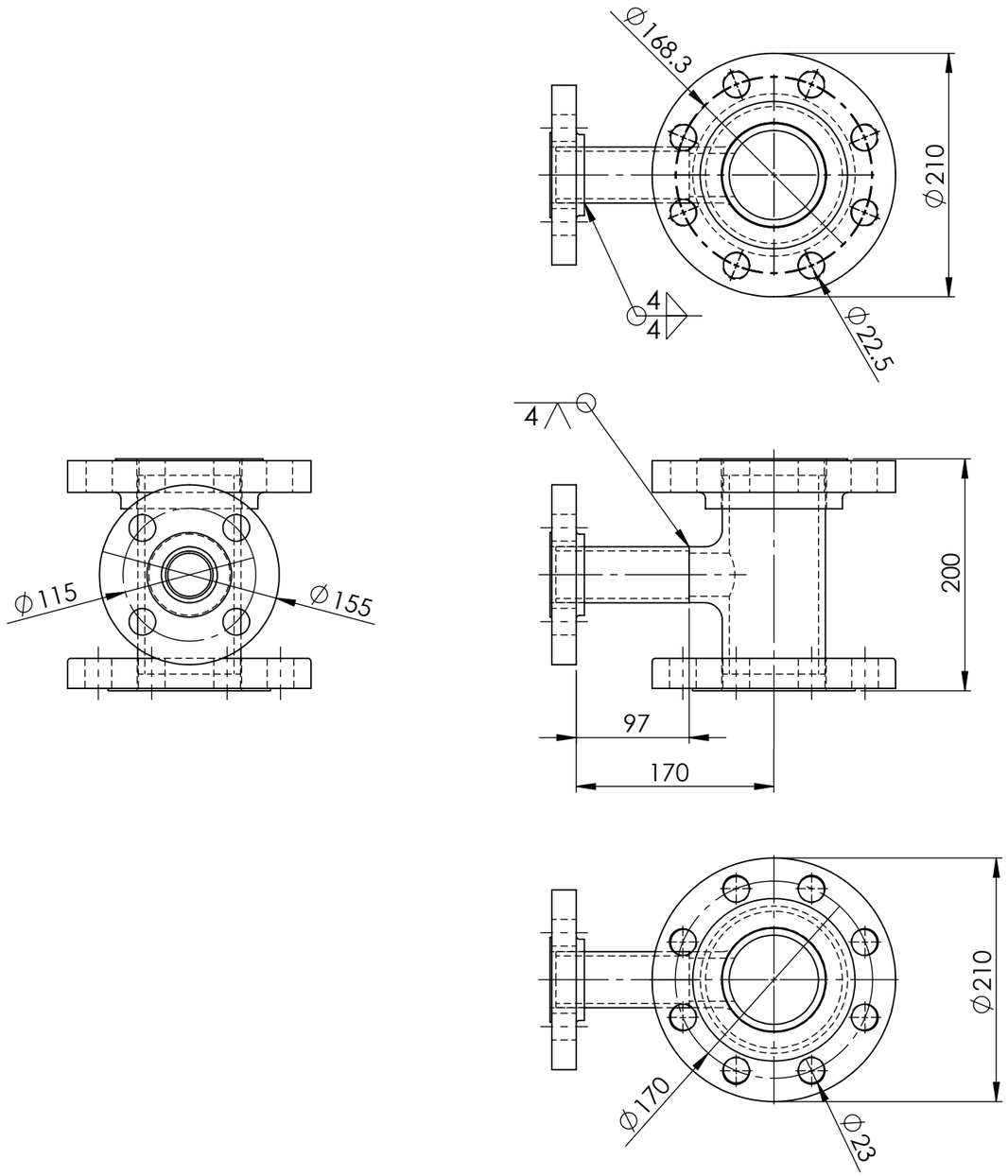

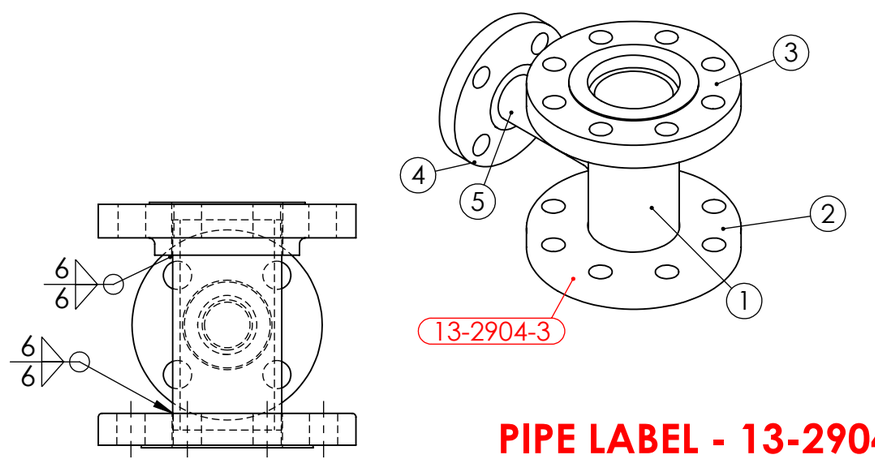

PIPE LABEL - 13-2904-3

ISSUED FOR CONSTRUCTION
18/11/25

PIPEWORK MANUFACTURED OF A JIG - FLANGES AS PER DRAWING
DIMENSIONS ARE APPROXIMATE

UNIT 13 VALVE 2904 PIPE 3 WEIGHT - 16.91 kg

REV	NAME & DATE	DESCRIPTION

UNLESS OTHERWISE SPECIFIED:
TOLERANCES: MACHINE + / - 0.25mm
FABRICATION + / - 1.0 mm

THIS DRG SUPPLIED BY
RODDY ENGINEERING
14 Waratah St, TUMUT NSW 2720
Ph: 02 6947 4039

DRAWING No. 13-2904-3 REV:

DRAWN N DE BRUYN 8/08/2025
DRAWING CHECKED
DESIGNED
DESIGN CHECKED
SCALE 1:5
WORK ORDER No
APPROVED
SECTION No/KKS
A3 SHEET SIZE

snowyhydro LIMITED

M2 POWER STATION UNIT 11
VALVE 2904 DOWN STREAM PIPE 3

SMA-DRG-NO

REV

SHEET 1 OF 1

0,0