ITEM NO.	DESCRIPTION	LENGTH	MATERIAL	MASS (kg)
1	73x5.1 CHS	48	316L STAINLESS STEEL	0.42

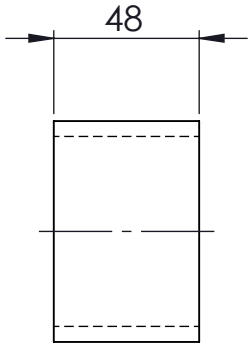

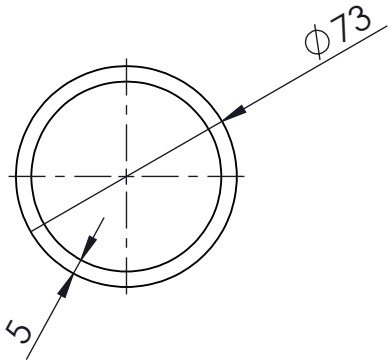

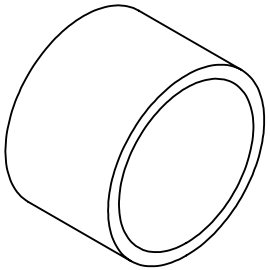

MATERIAL:- 316L STAINLESS STEEL

65NB SHED 40 PIPE 316 S/S WEIGHT - 0.42 kg

UNLESS OTHERWISE SPECIFIED: TOLERANCES: MACHINE + / - 0.25mm FABRICATION + / - 1.0 mm

DIMENSIONS IN MILLIMETRES

THIS DRAWING IS THE PROPERTY OF MECHANICAL ENGINEERING & CAD SERVICES (MECS) Pty Ltd & MUST NOT BE MANUFACTURED FROM,COPIED OR TRANSMITTED TO A THIRD PARTY WITHOUT THE PRIOR APPROVAL FROM MECHANICAL ENGINEERING & CAD SERVICES (MECS) Pty Ltd

MECS
Mechanical Engineering & CAD Services
11 Campbell Place WAGGA NSW 2650
Ph: - 0409 985 816
Email: nick@mecservices.com.au

THIRD ANGLE PROJECTION

WEIGHT: 0.42 kg

CLIENT

RODDY ENGINEERING
14 Waratah St TUMUT NSW 2720
Ph: - 02 6947 4039
Email: roddyeng.com.au

TITLE: 65NB SHED 40 PIPE 316 S/S

DWG NO. 13-2905-1-1 | A4

DRAWN N DE BRUYN | DATE 17/09/2025 | SCALE:1:2.5 | SHEET 1 OF 1