ITEM	DRAWING No	DESCRIPTION	QTY.	MASS (kg)
1	OEM-65NB-T-40-316L	65NB BUTT WELD TEE SHED 40 316L S/S	1	1.6149
2	OEM-50NB-300-SO-M-316L	50NB ANSI 300 Lb SLIP ON FLANGE MACHINED NECK 316L S/S	2	2.78
3	OEM-50NB-300-SO-316L	50NB ANSI Lb 300 SLIP ON FLANGE 316L S/S	1	2.98
4	13-2905-1-1	65NB SHED 40 PIPE 316 S/S	1	0.42

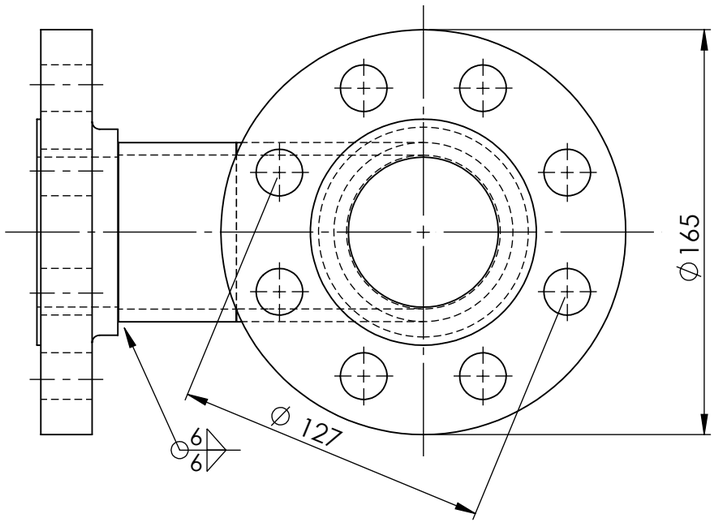

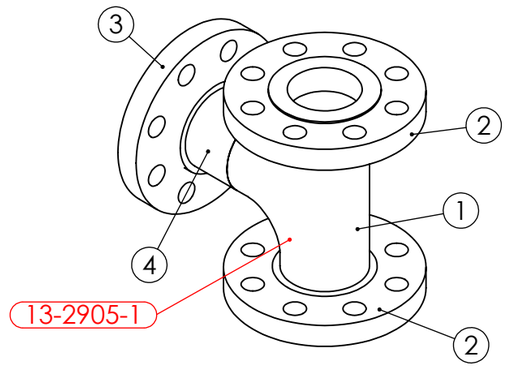

PIPE LABEL - 13-2905-1

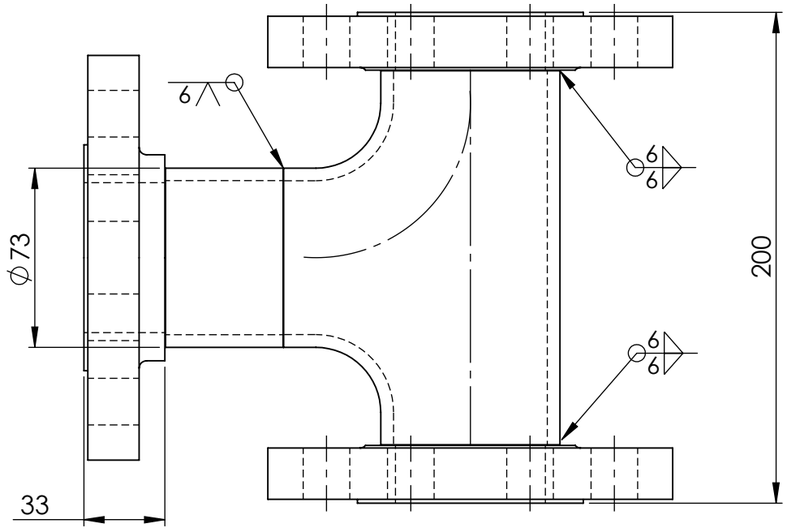

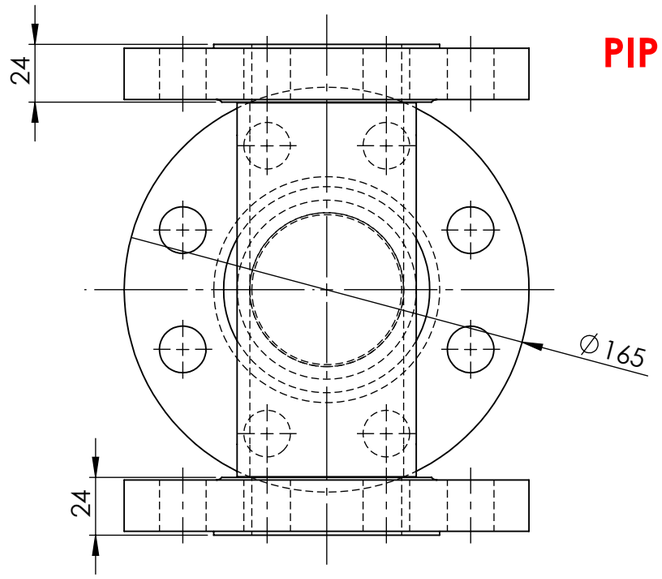

PIPEWORK MANUFACTURED OF A JIG - FLANGES AS PER DRAWING
DIMENSIONS ARE APPROXIMATE

ISSUED FOR CONSTRUCTION 10/11/25

UNIT 13 VALVE 2905 DOWN STREAM PIPE 1 WEIGHT - 10.56 kg

REV	NAME & DATE	DESCRIPTION

UNLESS OTHERWISE SPECIFIED:
TOLERANCES: MACHINE + / - 0.25mm
FABRICATION + / - 1.0 mm

THIS DRG SUPPLIED BY
RODDY ENGINEERING
14 Waratah St, TUMUT NSW 2720
Ph: 02 6947 4039

DRAWING No. 13-2905-1
REV:

DRAWN N DE BRUYN 17/09/2025
DRAWING CHECKED
DESIGNED
DESIGN CHECKED
SCALE 1:2.5
WORK ORDER No
APPROVED
SECTION No/KKS
A3 SHEET SIZE

snowyhydro LIMITED

M2 POWER STATION UNIT 13
VALVE 2905 DOWN STREAM PIPE 1

REV

SHEET 1 OF 1

0,0