ITEM	DRAWING No	REV	DESCRIPTION	QTY.	MASS (kg)
1	OEM-50x45-LR-10-316L		50NB LONG RADIUS BEND x 45 DEGREES SHED 10 316L S/S	1	0.24
2	OEM-50NB-300-SO-M-316L		50NB ANSI 300 Lb SLIP ON FLANGE MACHINED NECK 316L S/S	1	2.78
3	OEM-50-LR-40-316L		50NB LONG RADIUS BEND SHED 40 316L S/S	1	0.66
4	J003435-66A	A	50NB SHED 10 PIPE 316 SS VALVE 2906	1	11.00
5	13-2906-1-1		50NB SHED 10 PIPE 316L S/S	1	0.32

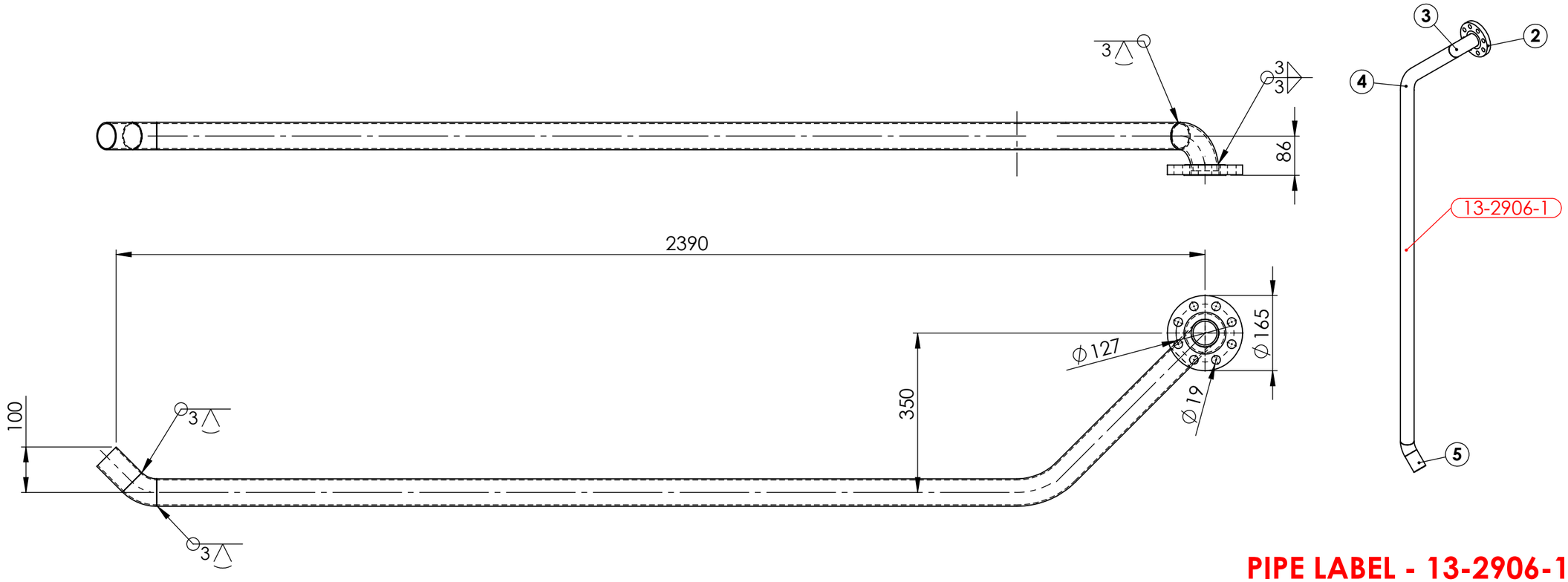

PIPE LABEL - 13-2906-1

ISSUED FOR CONSTRUCTION 13/11/25

PIPEWORK MANUFACTURED OF A JIG - FLANGES AS PER DRAWING
DIMENSIONS ARE APPROXIMATE

UNIT 13 VALVE 2906 PIPE WEIGHT - 13.56 kg

REV	NAME & DATE	DESCRIPTION

UNLESS OTHERWISE SPECIFIED:
TOLERANCES: MACHINE + / - 0.25mm
FABRICATION + / - 1.0 mm

THIS DRG SUPPLIED BY
RODDY ENGINEERING
14 Waratah St, TUMUT NSW 2720
Ph: 02 6947 4039

DRAWING No. 13-2906-1 REV:

DRAWN N DE BRUYN 17/09/2025
DRAWING CHECKED
DESIGNED
DESIGN CHECKED
SCALE 1:10
WORK ORDER No
APPROVED
SECTION No/KKS
A3 SHEET SIZE

snowyhydro LIMITED

M2 POWER STATION UNIT 13
VALVE 2906 DOWN STREAM PIPE

SMA-DRG-NO

REV

SHEET 1 OF 1

0,0