DIMENSIONS IN MILLIMETRES

ITEM	DRAWING No	DESCRIPTION	QTY.	MASS (kg)
1	OEM-100NB-T-40-316L	100NB BUTT WELD TEE SHED 40 316L S/S	1	4.0
2	OEM-100-JIS30K-P-316L	100NB JISK30 PLATE FLANGE 316L S/S	3	7
3	OEM-100-LR-40-316L	100NB LONG RADIUS BEND 316L S/S SHED 40	3	3.9
4	OEM-50NB-300-SO-M-316L	50NB ANSI 300 Lb SLIP ON FLANGE MACHINED NECK 316L S/S	1	2.78
5	13-2916-1-1	100NB & 80 SHED 40 PIPE 316 S/S	1	31.11

RED EYE QR CODE AREA

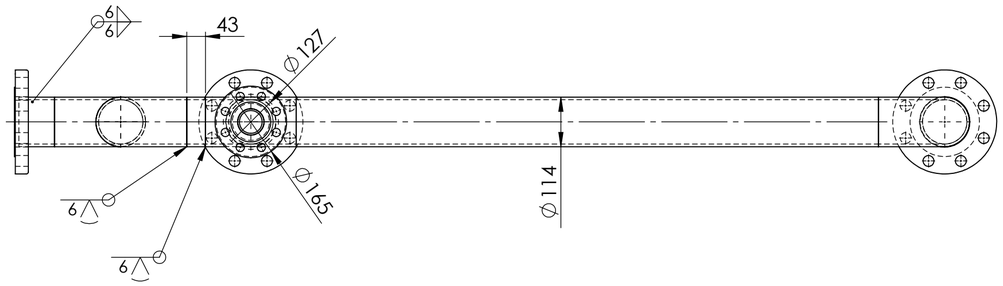

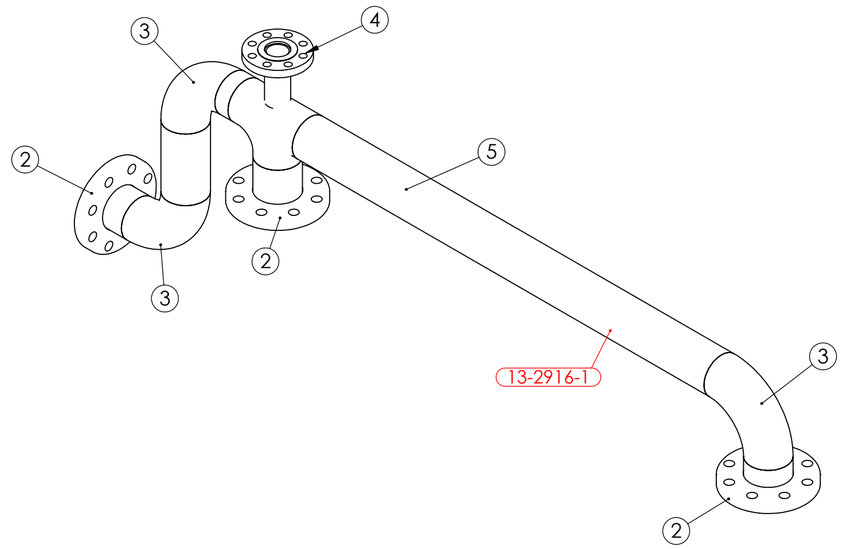

PIPE LABEL - 13-2916-1

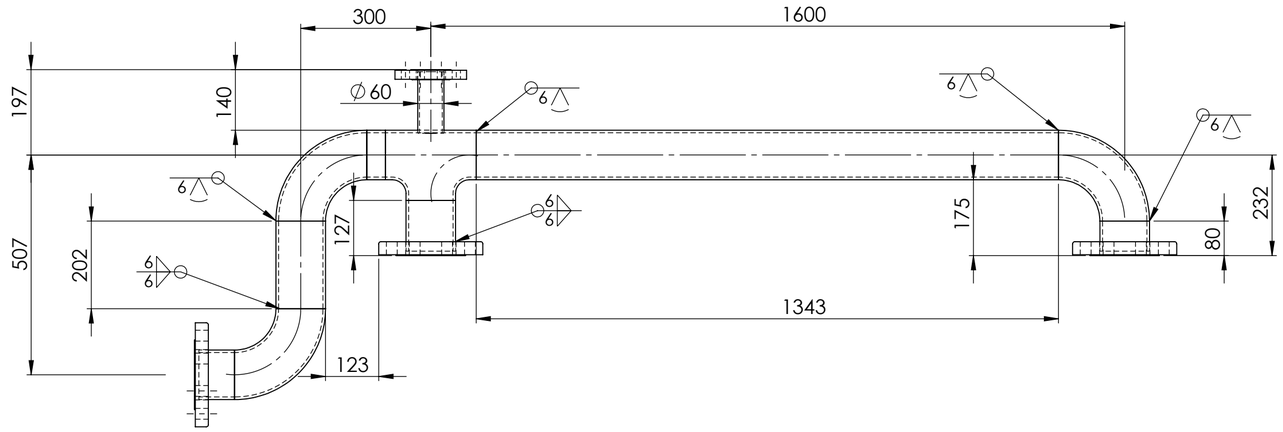

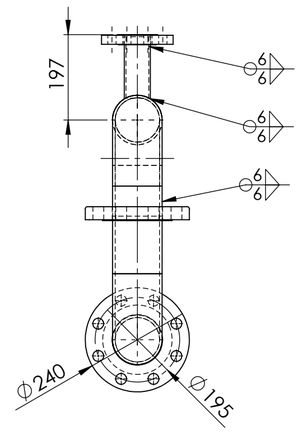

ISSUED FOR CONSTRUCTION 10/11/25

PIPEWORK MANUFACTURED OF A JIG - FLANGES AS PER DRAWING
DIMENSIONS ARE APPROXIMATE

UNIT 13 VALVE 2916 PIPE 1 WEIGHT - 72.11 kg

REV	NAME & DATE	DESCRIPTION

UNLESS OTHERWISE SPECIFIED:
TOLERANCES: MACHINE + / - 0.25mm
FABRICATION + / - 1.0 mm

THIS DRG SUPPLIED BY
RODDY ENGINEERING
14 Waratah St, TUMUT NSW 2720
Ph: 02 6947 4039

DRAWING No. 13-2916-1 REV:

DRAWN N DE BRUYN 17/09/2025
DRAWING CHECKED
DESIGNED
DESIGN CHECKED
SCALE 1:10
WORK ORDER No
APPROVED
SECTION No/KKS
A2 SHEET SIZE

snowyhydro LIMITED

M2 POWER STAION UNIT 13
VALVE 2916 DOWN STREAM PIPE

SMA-DRG-NO

REV

SHEET 1 OF 1