ITEM	DRAWING No	DESCRIPTION	QTY.	MASS (kg)
1	OEM-100-300-SO-316L	100NB - 300lb SLIP ON FLANGE 316L S/S	2	9.53
2	OEM-100-LR-40-316L	100NB LONG RADIUS BEND 316L S/S SHED 40	1	3.9
3	J003435-53	100NB SHED 40 PIPE x 135 DEGREE BEND 356R	1	20.70
4	J003435-51	100NB SHED 40 PIPE x 90 DEGREE BEND 356R	1	98.30
5	13-2919-1-1	100NB SHED 40 PIPE 316 S/S	1	2.17

RED EYE QR CODE AREA

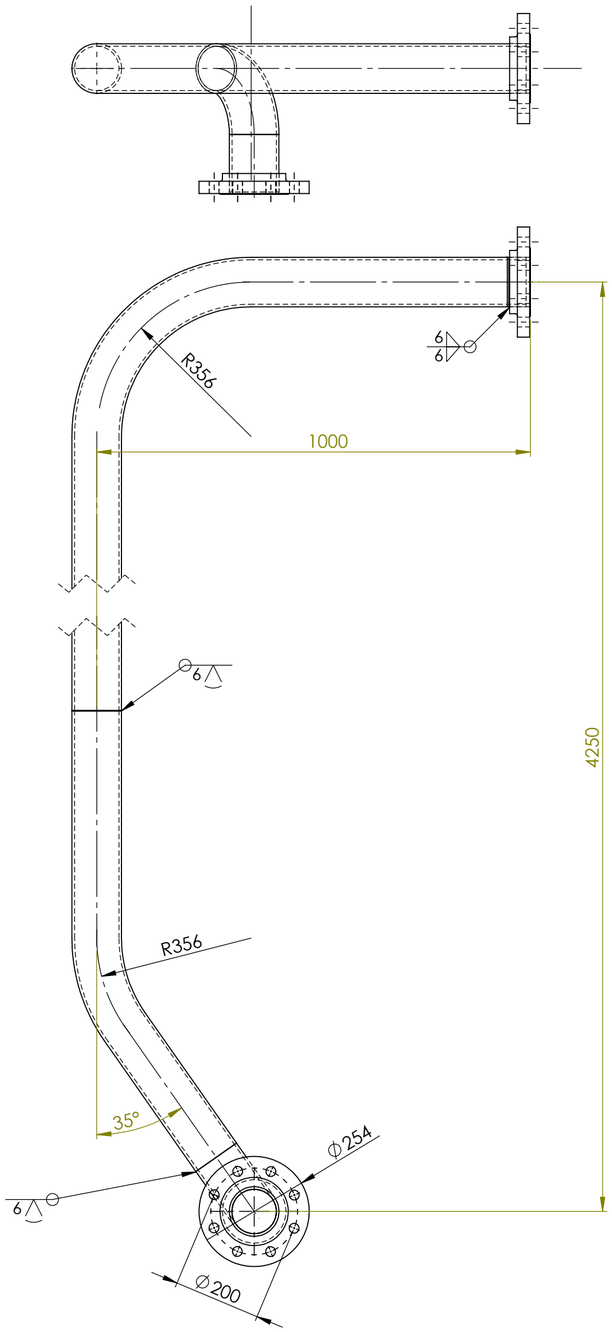

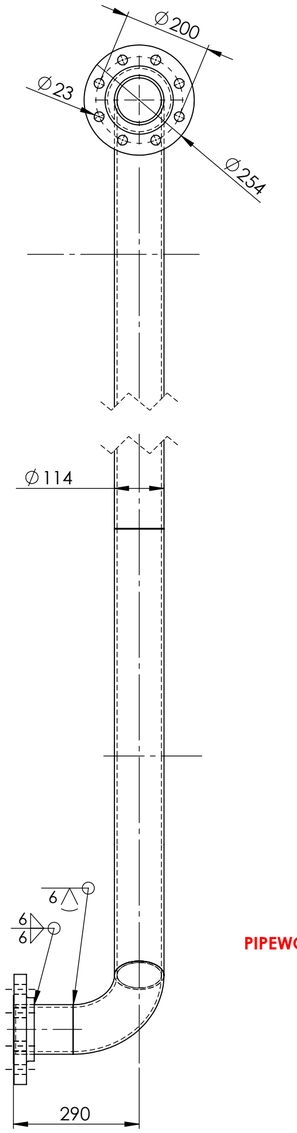

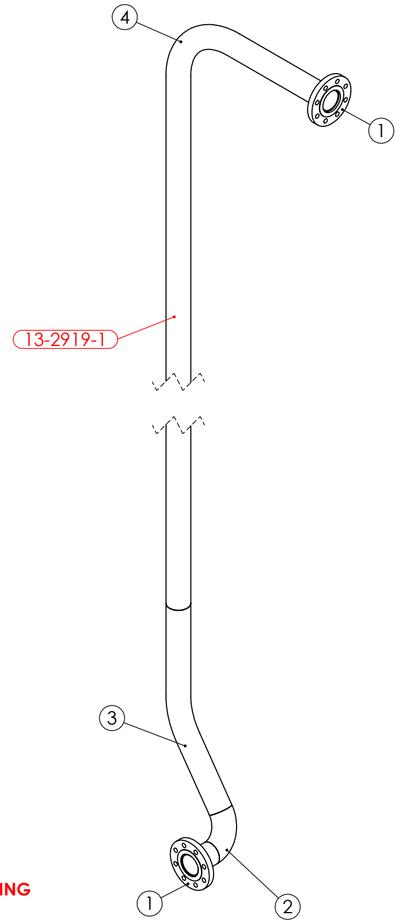

PIPEWORK MANUFACTURED OF A JIG - FLANGES AS PER DRAWING
DIMENSIONS ARE APPROXIMATE

PIPE LABEL - 13-2919-1

ISSUED FOR CONSTRUCTION 20/1/26
REQUIRES PLANNING & SITE INTERACTION

UNIT 13 VALVE 2921 DOWN STREAM PIPE 1 WEIGHT - 107.52 kg

REV	NAME & DATE	DESCRIPTION

UNLESS OTHERWISE SPECIFIED:
TOLERANCES: MACHINE + / - 0.25mm
FABRICATION + / - 1.0 mm

THIS DRG SUPPLIED BY
RODDY ENGINEERING
14 Waratah St, TUMUT NSW 2720
Ph: 02 6947 4039

DRAWING No. 13-2919-1
REV: 0

DRAWN: N DE BRUYN 20/01/2026
DRAWING CHECKED
DESIGNED
DESIGN CHECKED
SCALE 1:10
APPROVED
WORK ORDER No
SECTION No/KKS
A2 SHEET SIZE

snowyhydro LIMITED

M2 POWER STATION UNIT 13
VALVE 2919 DOWNSTREAM PIPE 1

SMA-DRG-NO

REV

SHEET 1 OF 1