594,420

DIMENSIONS IN MILLIMETRES

ITEM	DRAWING No	DESCRIPTION	QTY.	MASS (kg)
1	OEM-100-300-SO-316L	100NB - 300lb SLIP ON FLANGE 316L S/S	2	9.53
2	J003435-58-20	100NB SHED 40 OFFSET BEND VALVE 2919 PIPE 5	1	44.24
3	J003435-58-15	100NB SHED 40 OFFSET BEND VALVE 2919 PIPE 5	1	61.89
4	J003435-58-10	100NB SHED 40 PIPE x 135 DEGREE BEND 305R	1	16.98

RED EYE QR CODE AREA

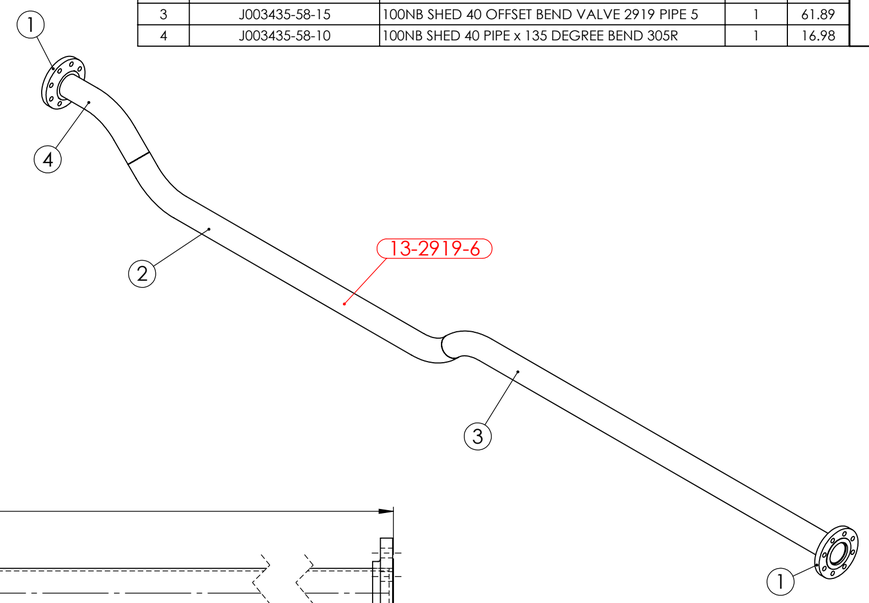

PIPE LABEL - 13-2919-6

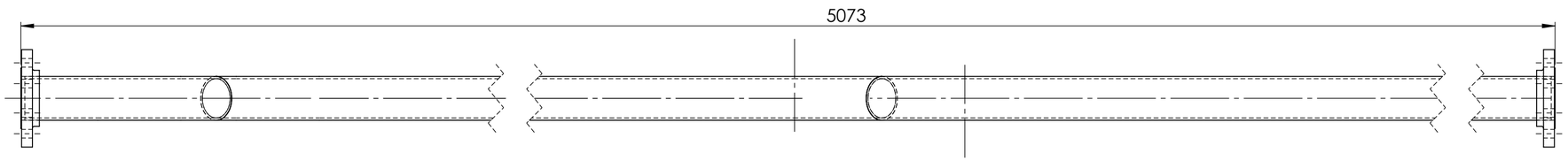

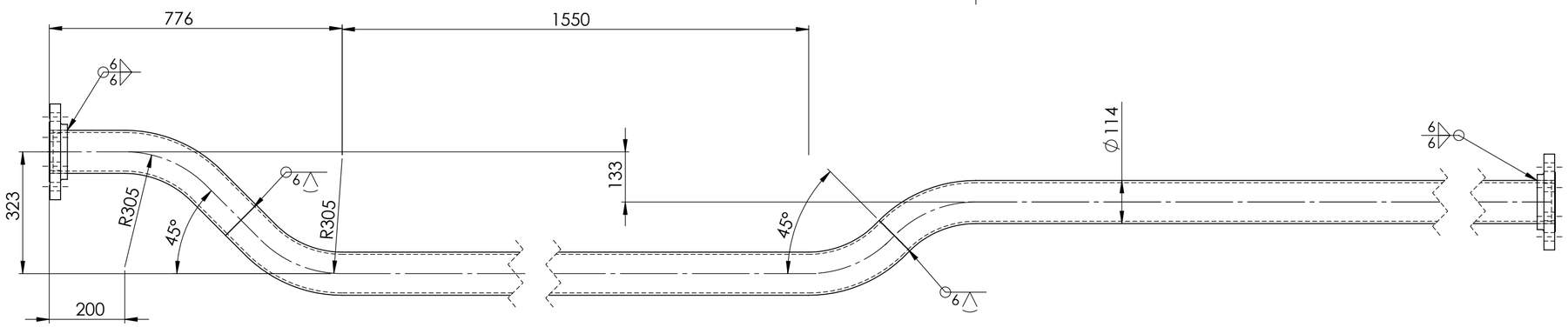

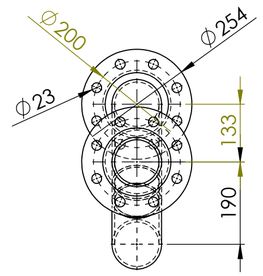

ISSUED FOR CONSTRUCTION 20/1/26

PIPEWORK MANUFACTURED OF A JIG - FLANGES AS PER DRAWING
DIMENSIONS ARE APPROXIMATE

UNIT 13 VALVE 2919 PIPE 6 WEIGHT - 104.20 kg

REV	NAME & DATE	DESCRIPTION

UNLESS OTHERWISE SPECIFIED:
TOLERANCES: MACHINE + / - 0.25mm
FABRICATION + / - 1.0 mm

THIS DRG SUPPLIED BY
RODDY ENGINEERING
14 Waratah St, TUMUT NSW 2720
Ph: 02 6947 4039

DRAWING No. 13-2919-6 REV:

DRAWN N DE BRUYN 20/01/2025
DRAWING CHECKED
DESIGNED
DESIGN CHECKED
SCALE 1:10
WORK ORDER No
APPROVED
SECTION No/KKS
A2 SHEET SIZE

snowyhydro LIMITED

M2 POWER SATATION UNIT 13
VALVE DOWN STREAM PIPE 6

SMA-DRG-NO

REV

SHEET 1 OF 1

0,0